ZOOMLION

ZOOMLION ZCC9800W CRAWLER CRANE

TECHNICAL SPECIFICATIONS

ZCC9800W/27Y

[2020]

Zoomlion Heavy Industry Science & Technology Co.,Ltd.

Zoomlion ZCC9800W Crawler Crane

Technical Specifications

ZCC9800W/27Y

1. Overall dimensions and main technical parameters

1.1 Overall dimensions of the operation condition of superlift S boom

1.2 Main technical parameters

1.3 Description on boom combination

2. Overall dimensions and weights of major components in transport

3. Lifting performance

3.1 Lifting performance of S

3.2 Lifting performance of SL

3.3 Lifting performance of SDB

3.4 Lifting performance of SLDB

3.5 Lifting performance of SLHS

3.6 Lifting performance of SLHSDB-1

3.7 Lifting performance of SLHSDB-2

3.8 Lifting performance of SWDB/SWD

3.9 Lifting performance of SFvDB/SFvD

3.10 Lifting performance of SW

3.11 Lifting performance of SLHSDB-3

4. Technical instruction

4.1 Mechanisms

4.2 Systems

5. Working conditions and matters need attention

5.1 Working environment

5.2 About load

6. Safety monitoring system

6.1 Hardware devices of safety monitoring system

6.2 Management authority

6.3 Self-diagnosis of faults

6.4 Warning device

1. Overall dimensions and main technical parameters

1.1. Overall dimensions of the operating mode of superlift S boom

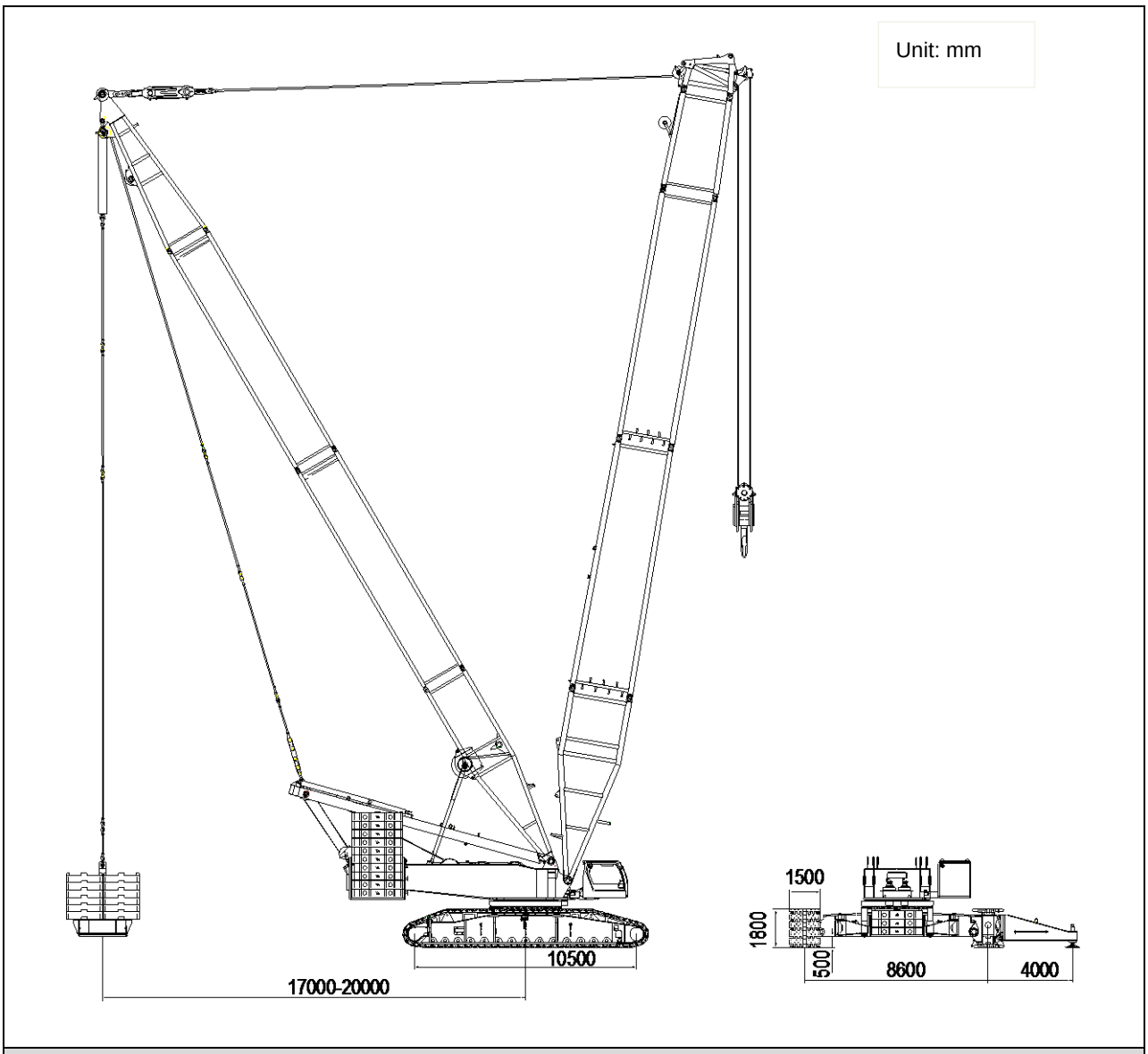

Figure 1 Overall dimensions of the operating mode of superlift S boom

1.2. Main technical parameters

Item			Parameters
Max. lifting moment		t×m	9800 11000 (optional)
Basic S boom	Max. lifting capacity × radius	t×m	600×7
	Length of heavy boom	m	39～93
	Length of light boom	m	72～114
Superlift S boom	Max. lifting capacity × radius	t×m	650×14（Suspended ballast of 300t）
			800×9（Suspended ballast of 400t）
	Length of heavy boom	m	39～141
	Length of light boom	m	90～150
Derrick boom	Length of derrick boom	m	42
SLHS	Max. lifting capacity × radius	t×m	180×16
	Length of SLHS boom head	m	7
	Main boom length	m	90～114
SLHSDB-1	Max. lifting capacity × radius	t×m	180×28
	Length of SLHSDB-1 boom head	m	7
	Main boom length	m	108～159
SLHSDB-2	Max. lifting capacity × radius	t×m	180×26
	Length of SLHSDB-2 boom head	m	7
	Main boom length	m	147～171
SWDB/SWD	Max. lifting capacity × radius	t×m	325×22
	Luffing jib length	m	30～96
	Length of main boom with jib on	m	63～99
	Main boom angle	°	85、75、65
SFvDB/SFvD	Max. lifting capacity × radius	t×m	360×24
	Jib angle	°	15

	Jib length	m	18
	Length of main boom with jib on	m	63～111
SW	Max. lifting capacity × radius	t×m	221×16
	Luffing jib length	m	24～84
	Length of main boom with jib on	m	39～63
	Main boom angle	°	85、75、65
SLHSDB-3	Max. lifting capacity × radius	t×m	270×32
	Length of SLHSDB-3 boom head	m	5.5
	Main boom length	m	108～138
Mechanisms I and II of the primary hoisting winch	Speed of a single rope of the outermost layer on the winch	m/min	130
	Wire rope diameter	mm	28
	Tension of a single rope	KN	160
Hoisting mechanism of the tip boom	Speed of a single rope of the outermost layer on the winch	m/min	130
	Wire rope diameter	mm	28
	Tension of a single rope	KN	160
Primary derricking mechanism	Speed of a single rope of the outermost layer on the winch	m/min	56×2
	Wire rope diameter	mm	28
	Tension of a single rope	KN	160
Superlift derricking mechanism	Speed of a single rope of the outermost layer on the winch	m/min	130
	Wire rope diameter	mm	28
	Tension of a single rope	KN	160
Slewing speed		rpm	0~0.7
Traveling speed		km/h	0.6/1.0
Max. Gradeability		%	30
Total weight for the basic operating mode		t	520

Max. transport weight of a single piece t		40
Weight of suspended ballast t (Central slewing radius m)		300（400 for option） （17、20）
Rear counterweight t		190（210）
Central counterweight t		60
Benz engine	Model	OM502LA.E3A/3
	Rated power/ rotational speed kW/rpm	420/1800
	Max. output torque Nm	2700/1300
Cummins engine	Model	QSX15-C560
	Rated power/ rotational speed kW/rpm	418/1800
	Max. output torque Nm	2542/1400
Distance between track center × Crawler contact length × Crawler width mm		8600×10500×1500

1.3. Description on boom combination

There are two kinds of operating modes, the one without derrick boom and suspended ballast, and the one with derrick boom and suspended ballast. The boom is a trussed structure of high-strength pipes, and anchoring rods are made of high-strength plates.

●The one without derrick boom and suspended ballast:

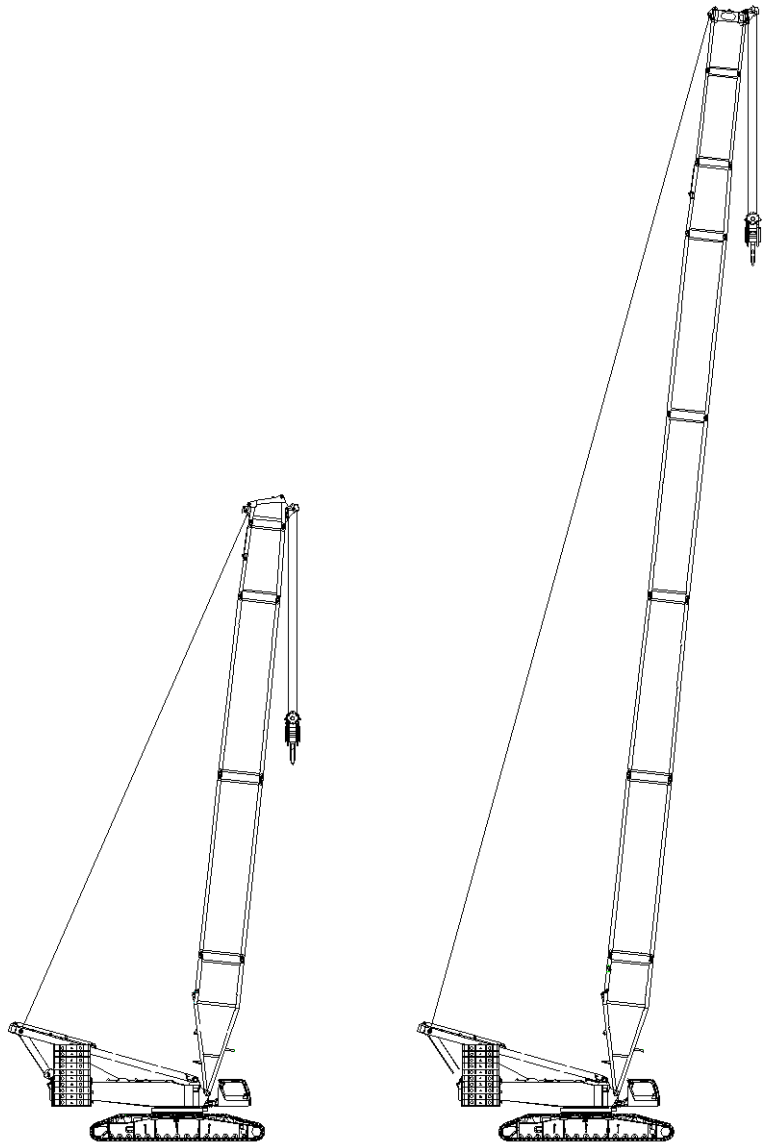

S SL

Figure 2 Boom combination

Code	Boom	Parameter
S	Heavy main boom	S=39～93m
SL	Light main boom	S=72～114m

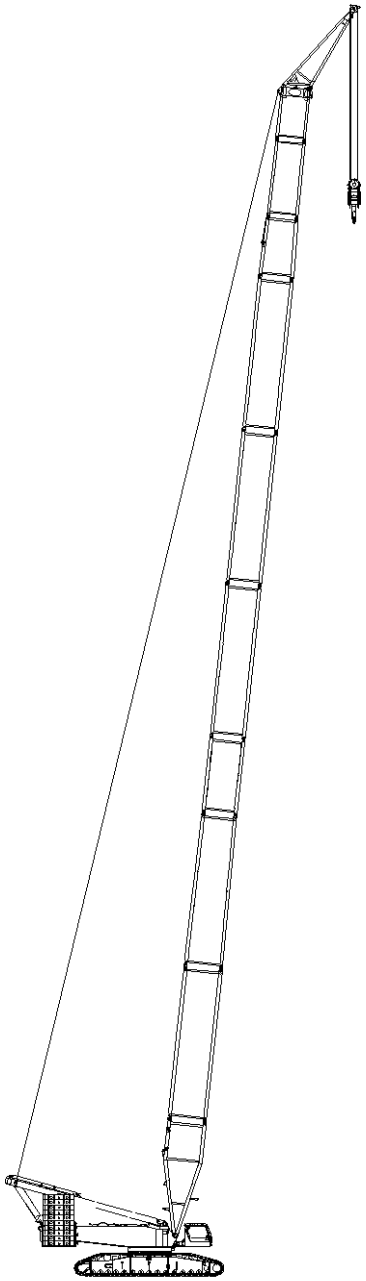

SLHS

Figure 3 Boom combination

Code	Boom	Parameter
SLHS	Jib on light main boom for wind plant	S=90～114m HS=7m

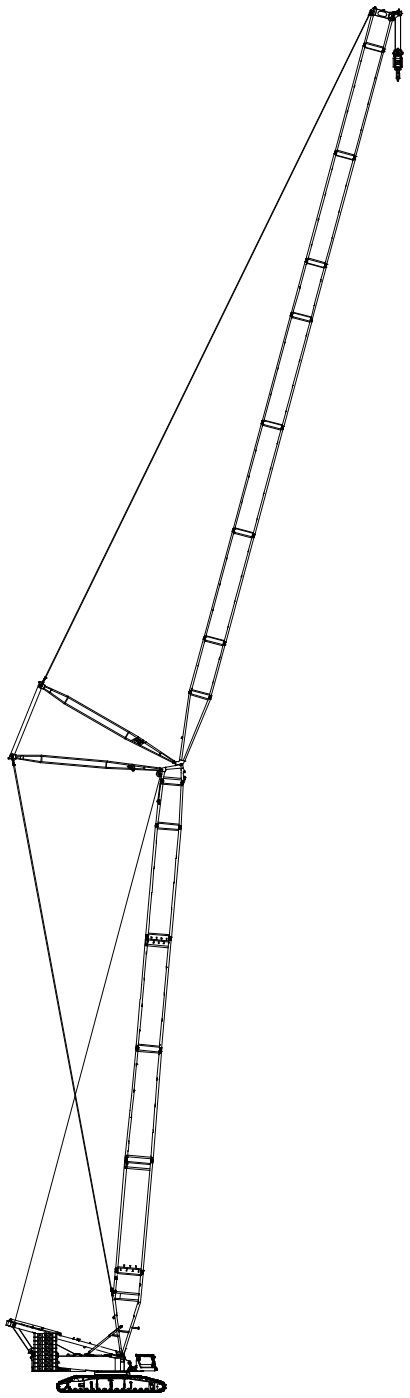

SW

Figure 4 Boom combination

Code	Boom	Parameter
SW	Luffing jib on heavy main boom	S=39～63m W=24～84m

●**The one with derrick boom and suspended ballast:**

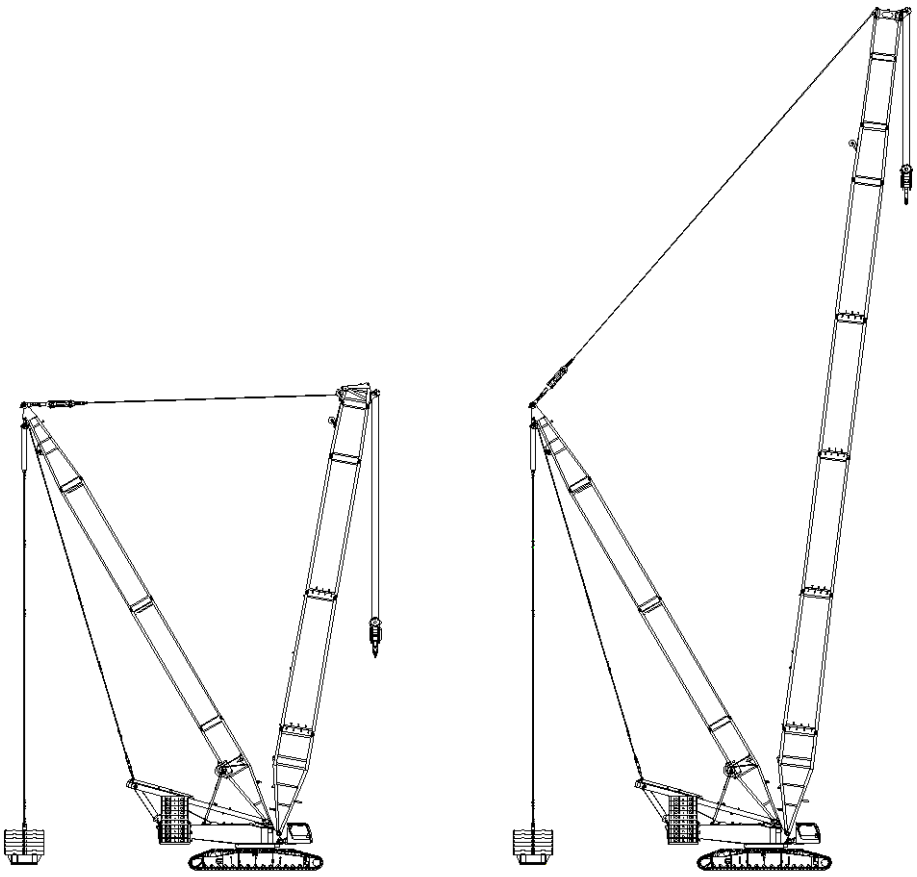

SDB-1/2 SLDB

Figure 5 Boom combination

Code	Boom	Parameter
SDB-1/2	Superlift heavy main boom	S=39~141m
SLDB	Superlift light main boom	S=90～150m

Note: The maximum rated lifting capacity of SDB-1 is 650t, and the maximum rated lifting capacity of SDB-2 (optional) is 800t (suspended ballast of 400t for option).

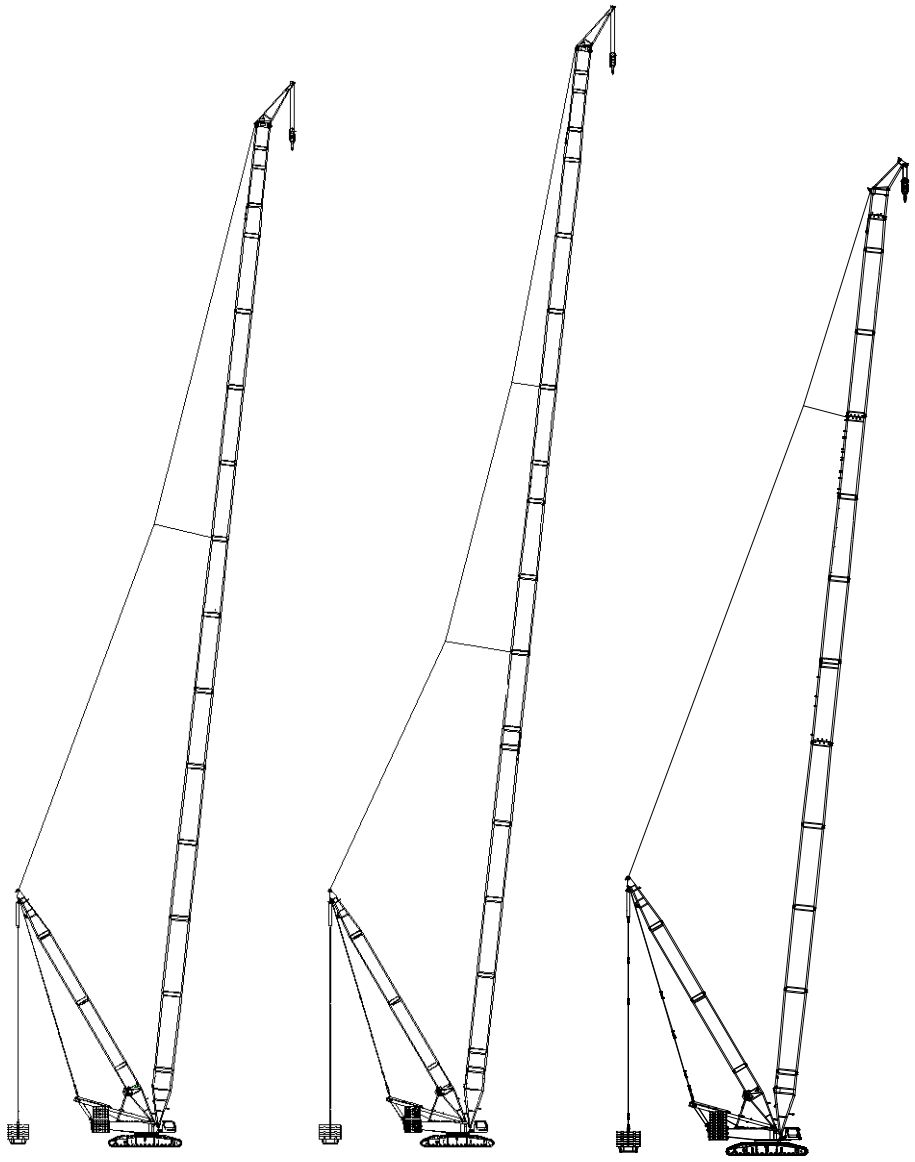

SLHSDB-1 SLHSDB-2 SLHSDB-3

Figure 6 Boom combination

Code	Boom	Parameters
SLHSDB-1	Jib on superlift main boom for wind plant (strengthened)	S=108～159m HS=7m
SLHSDB-2	Jib on superlift main boom for wind plant (strengthened, with an ultra-wide boom)	S=147～171m HS=7m
SLHSDB-3	Jib on superlift main boom for wind plant (strengthened, 270t)	S=108～138m HS=5.5m

Note: SLHSDB-2 is an optional operating mode. An ultra-wide boom of 54m and suspended ballast of 400t are optional.

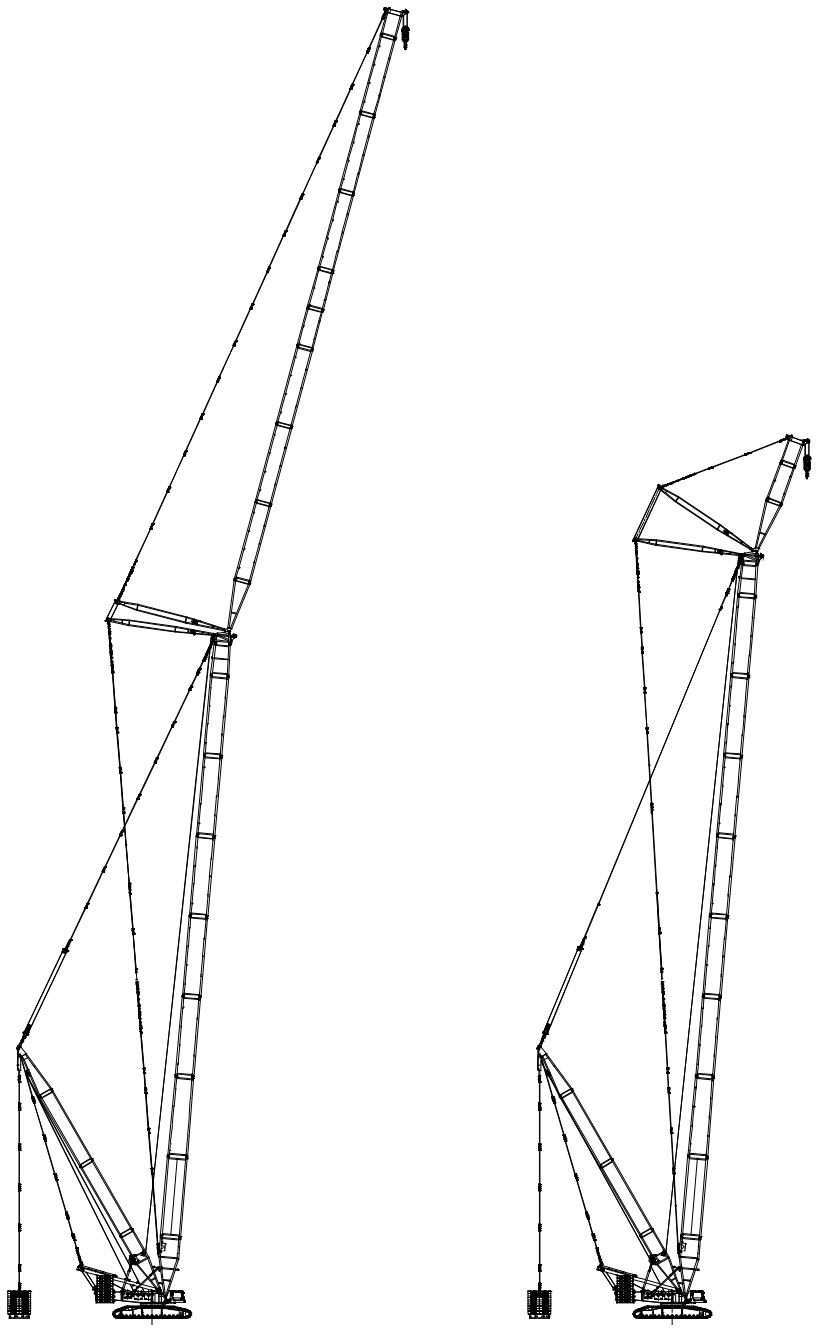

SWDB/SWD SFvDB/SFvD

Figure 7 Boom combination

Code	Boom	Parameter
SWDB/SWD	Superlift luffing jib on main boom (with derrick boom and suspended ballast)	S=63～99m W=30～96m
SFvDB/SFvD	Superlift heavy fixed jib (with derrick boom and suspended ballast)	S=63~111m Fv=18m

2 . Overall dimensions and weights of major components in transport

Components in transport	Items	
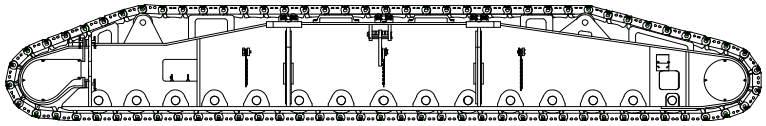	Track carrier assy.	
	Length	11600 mm
	Width	1500mm
	Height	1800mm
	Weight	44 t
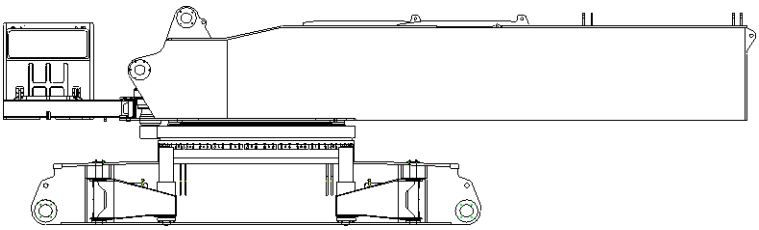	Basic machine	Combined
	Length	13000 mm
	Width	3400 mm
	Height	3785 mm
	Weight	71 t
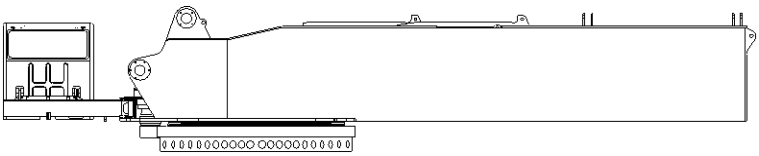	Basic machine	Detachable
	Length	13000 mm
	Width	3400 mm
	Height	2550 mm
	Weight	40 t
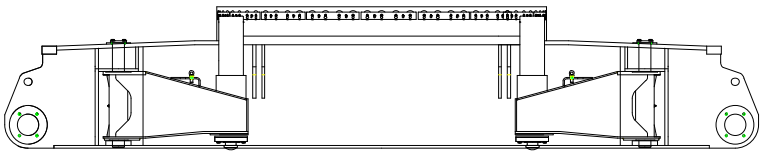	Chassis	Detachable
	Length	7730 mm
	Width	3390 mm
	Height	1470 mm
	Weight	31 t
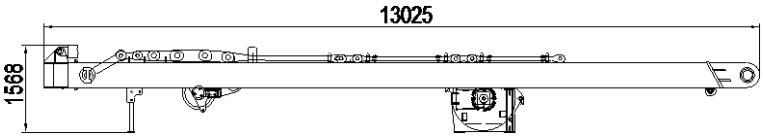	A-frame assy.	Detachable
	Length	13025 mm
	Width	2360mm
	Height	1568 mm
	Weight	13.6 t
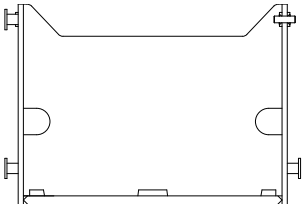	Counterweight base	
	Length	2880 mm
	Width	2050 mm
	Height	1960 mm
	Weight	5.3 t

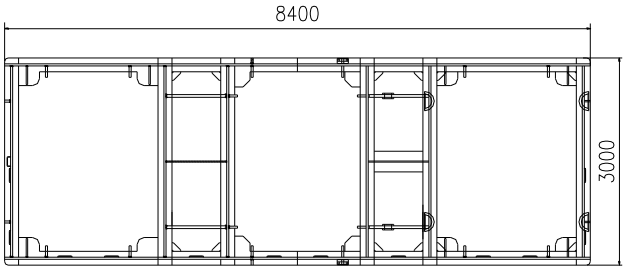	Suspended ballast base	
	Length	8400 mm
	Width	3000 mm
	Height	950 mm
	Weight	10 t
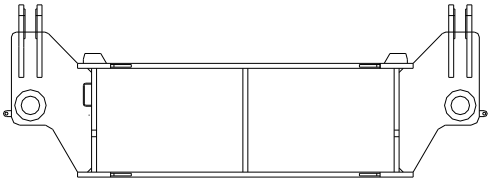	Detachable counterweight base	
	Length	2930 mm
	Width	2830 mm
	Height	1015 mm
	Weight	3.4 t
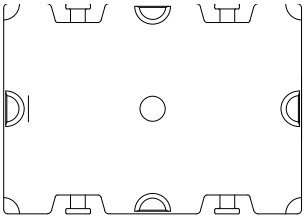	Counterweight plate	
	Length	1700 mm
	Width	2400 mm
	Height	365 mm
	Weight	5 t
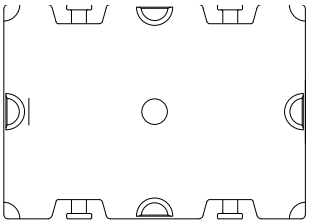	Counterweight plate	
	Length	1700 mm
	Width	2400 mm
	Height	455 mm
	Weight	10 t
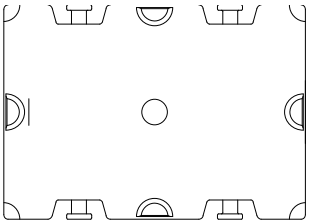	Counterweight plate	
	Length	1500 mm
	Width	2000 mm
	Height	595 mm
	Weight	10 t
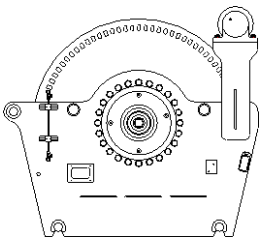	Hoisting winch	
	Length	1420 mm
	Width	2100 mm
	Height	1300 mm
	Weight	6.8 t

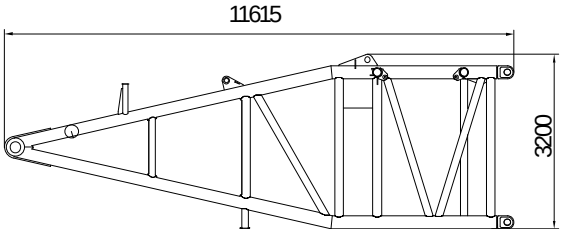

Main boom pivot section	（G11）
Length	9325 mm
Width	3450mm
Height	3205 mm
Weight	12 t

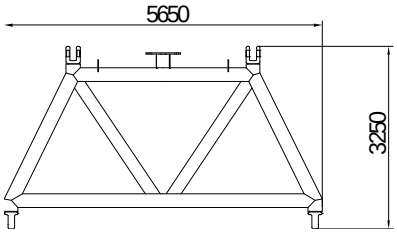

Ultra-wide reducing section A	（G80） optional
Length	5650 mm
Width	3220 mm
Height	3250 mm
Weight	5.8 t

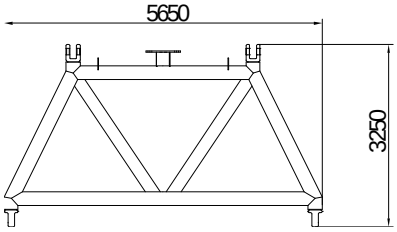

Ultra-wide reducing section B	（G81） optional
Length	5650 mm
Width	3220 mm
Height	3250 mm
Weight	5.8 t

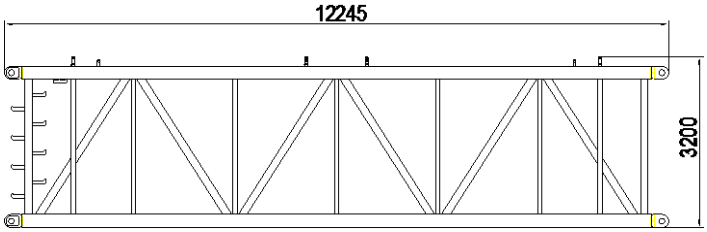

Ultra-wide intermediates section I	（G82） optional
Length	12245 mm
Width	2930 mm
Height	3200 mm
Weight	5.9 t

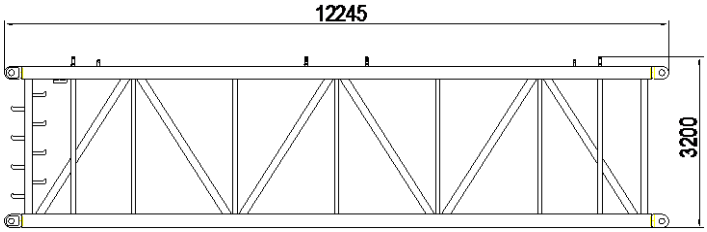

Ultra-wide intermediate section II	（G83） optional
Length	12245 mm
Width	2930 mm
Height	3200 mm
Weight	5.9 t

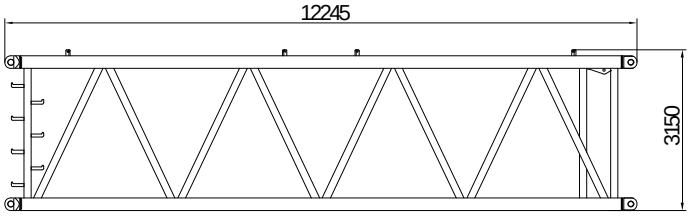

Strengthened intermediate section I (auxiliary bracing)	（G66A）
Length	12245 mm
Width	3450 mm
Height	3150 mm
Weight	10 t

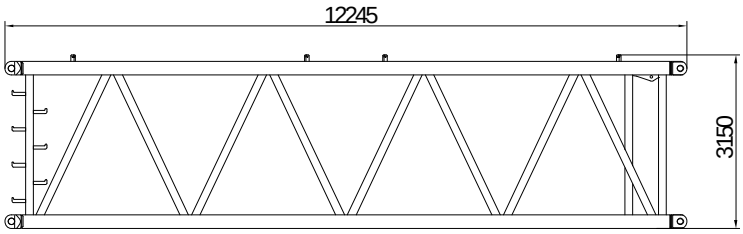

Strengthened intermediate section I	（G66）
Length	12245 mm
Width	3450 mm
Height	3150 mm
Weight	9.3 t

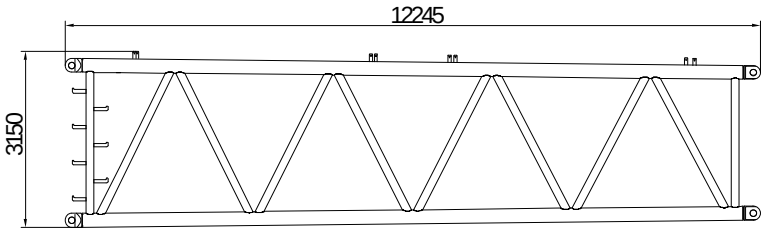

Reducing section B of strengthened intermediate section I	（G65）
Length	12245 mm
Width	3450 mm
Height	3150 mm
Weight	9.2 t

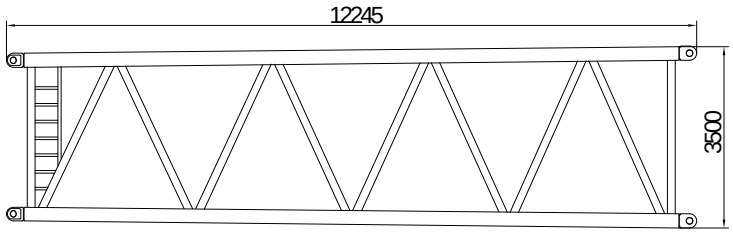

Reducing section A of strengthened intermediate section II	（G67）
Length	12245 mm
Width	3750 mm
Height	3500 mm
Weight	10t

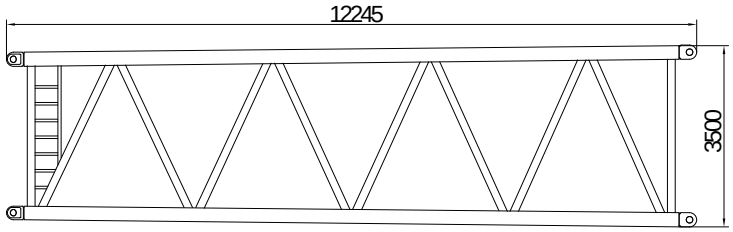

Reducing section B of strengthened intermediate section II	（G68）
Length	12245 mm
Width	3750 mm
Height	3500 mm
Weight	10t

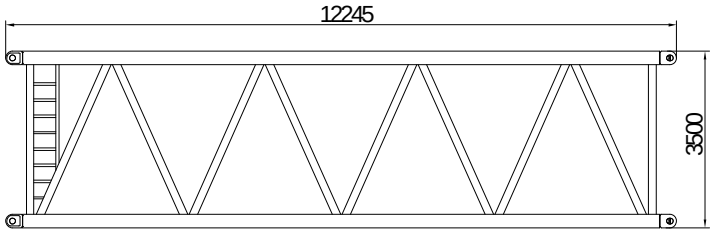

Strengthened intermediate section II	（G69）
Length	12245 mm
Width	3750 mm
Height	3500 mm
Weight	10t

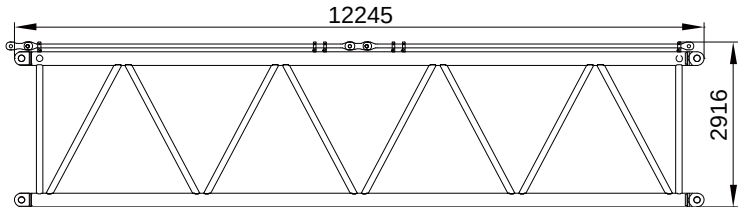

Main boom intermediate section As of 12m	（G14As）
Length	12245 mm
Width	2950 mm
Height	2916 mm
Weight	8.4 t

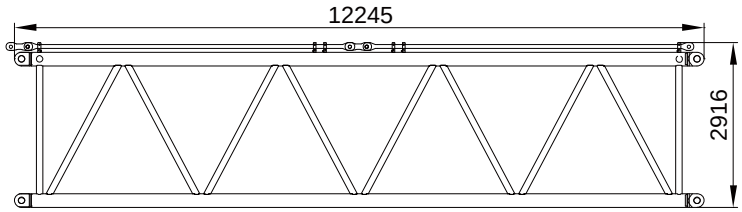

Main boom intermediate section B of 12m	（G14B）
Length	12245 mm
Width	2950 mm
Height	2916 mm
Weight	7.2 t

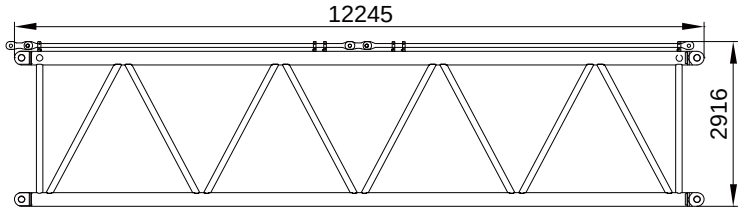

Main boom intermediate section C of 12m	（G14C）
Length	12245 mm
Width	2950 mm
Height	2916 mm
Weight	6.7t

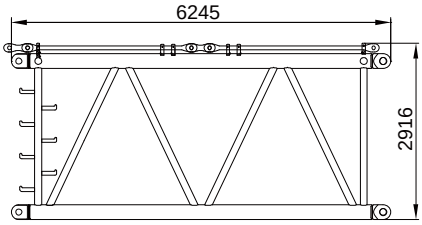

Main boom intermediate section of 6m	（G13）
Length	6245 mm
Width	2950 mm
Height	2916 mm
Weight	6.85 t

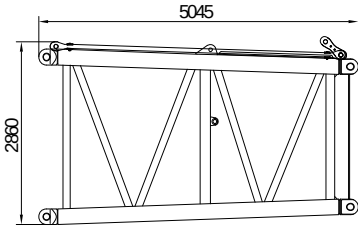

Main boom head	（G12）
Length	5045 mm
Width	2950 mm
Height	2860 mm
Weight	3.8 t

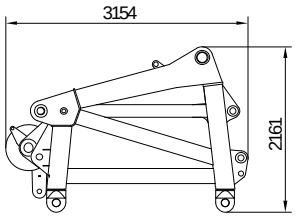	650t main boom head	（G62）
	Length	2161 mm
	Width	2860 mm
	Height	3154 mm
	Weight	4.5 t
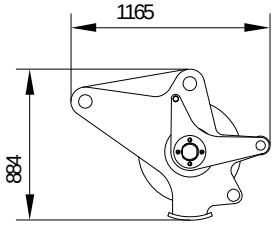	650t load-lifting pulley block	（G63）
	Length	1165 mm
	Width	1660 mm
	Height	884 mm
	Weight	1.2 t
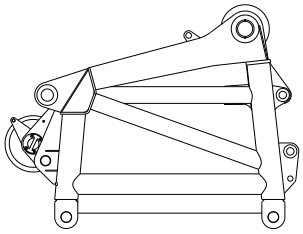	800t main boom head	（G61） optional
	Length	3120 mm
	Width	2905 mm
	Height	2385mm
	Weight	7 t
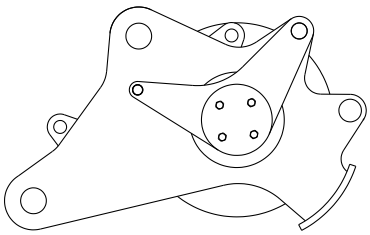	800t load-lifting pulley block	Optional
	Length	1120 mm
	Width	1400 mm
	Height	700 mm
	Weight	1.6 t
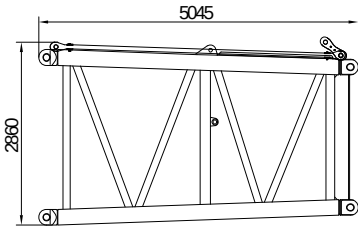	Reducing section of 800t	（G12A） optional
	Length	5045 mm
	Width	2950 mm
	Height	2860 mm
	Weight	3.8 t
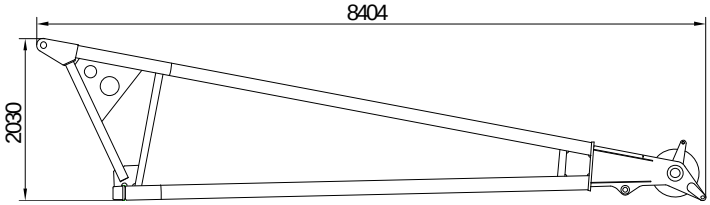	Wind plant jib	（G19）
	Length	8404 mm
	Width	1810 mm
	Height	2030 mm
	Weight	2.9 t

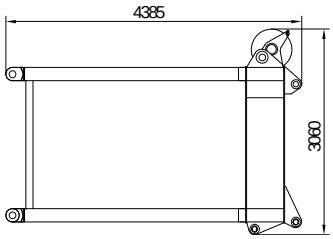

Luffing jib head	（G22）
Length	4385 mm
Width	2550 mm
Height	3060 mm
Weight	3.9 t

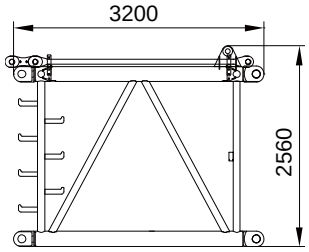

3m intermediate section of luffing jib	（G23）
Length	3200 mm
Width	2550 mm
Height	2560 mm
Weight	1.76 t

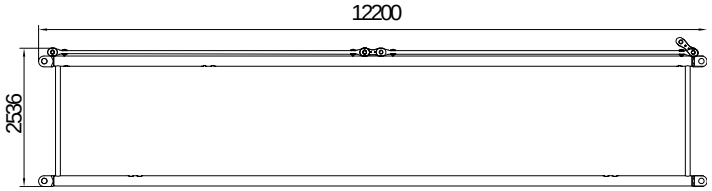

12m heavy intermediate section of luffing jib	（G26）
Length	12200 mm
Width	2800 mm
Height	2536 mm
Weight	5.35 t

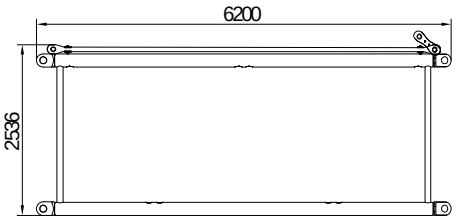

6m heavy intermediate section of luffing jib	（G30）
Length	6200 mm
Width	2800 mm
Height	2536 mm
Weight	2.95 t

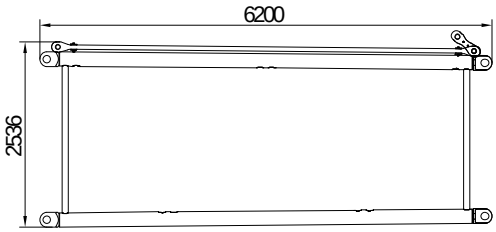

Luffing jib reducing section	（G29）
Length	6200 mm
Width	2800 mm
Height	2536 mm
Weight	2.9 t

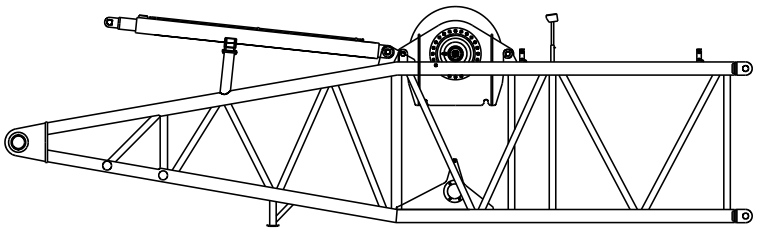

Pivot section of derrick boom	（G51）
Length	10275 mm
Width	2780 mm
Height	2980 mm
Weight	15.5 t

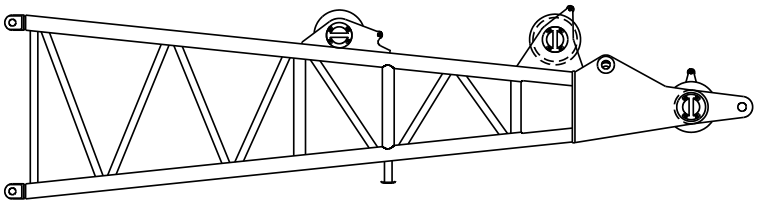

Derrick boom head	（G52）
Length	8815 mm
Width	2900 mm
Height	2510 mm
Weight	8 t

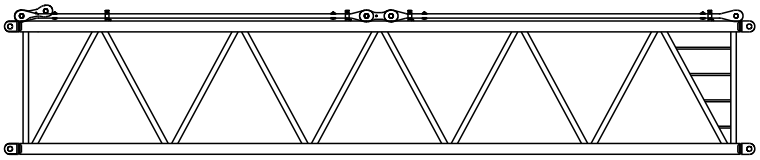

12m intermediate section of derrick boom	（G55）
Length	12180 mm
Width	2780 mm
Height	2440 mm
Weight	7.5t

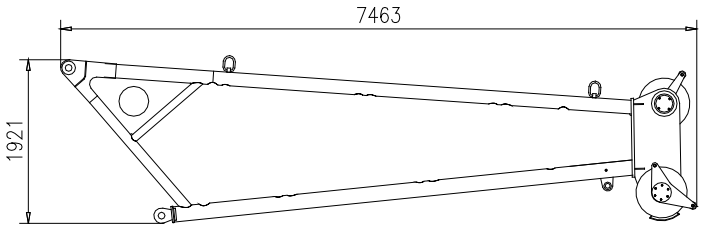

Wind plant jib	（G19A）
Length	7463 mm
Width	1789 mm
Height	1921 mm
Weight	2.94 t

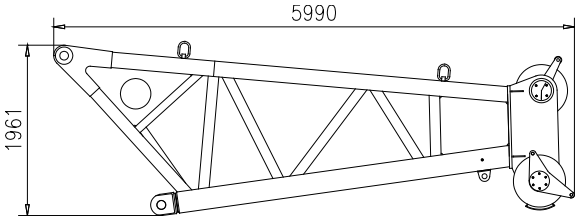

Wind plant jib	（G19B）
Length	5990 mm
Width	1808 mm
Height	1961 mm
Weight	4.1 t

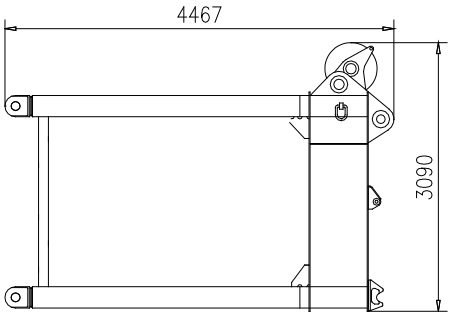	Jib for exclusive use of wind plant	（G22A）
	Length	4467 mm
	Width	2844 mm
	Height	3090 mm
	Weight	5 t
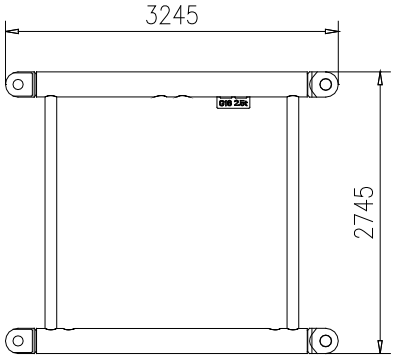	3m intermediate section of main boom	（G16）
	Length	3245 mm
	Width	2945 mm
	Height	2745 mm
	Weight	2.5 t
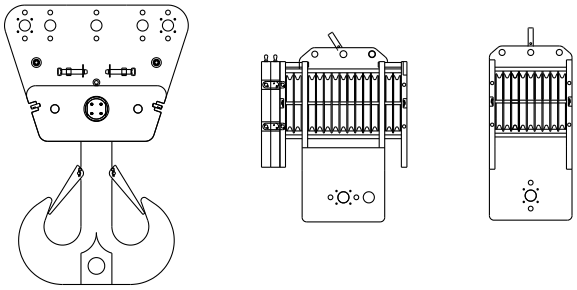	Primary load hook of 800t	Optional
	Length	1990 mm
	Width	1010 mm
	Height	3015 mm
	Weight	28t
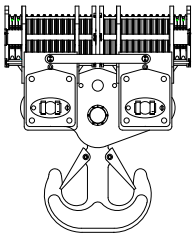	650t load hook	Optional
	Length	3040 mm
	Width	2480 mm
	Height	1430 mm
	Weight	11 t
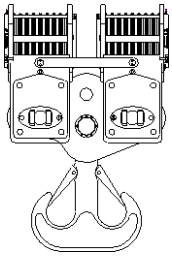	400t load hook	Optional
	Length	2960 mm
	Width	1970 mm
	Height	1330 mm
	Weight	9.1 t

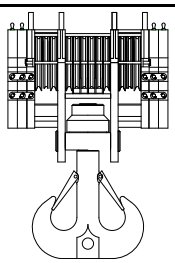	300t load hook	Optional
	Length	2630 mm
	Width	1750 mm
	Height	1186 mm
	Weight	6.9 t
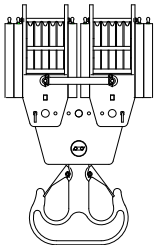	250t load hook	Standard
	Length	2730 mm
	Width	1675 mm
	Height	1120 mm
	Weight	5.7t
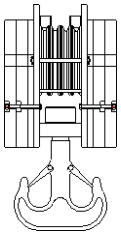	100t load hook	Optional
	Length	1970 mm
	Width	970 mm
	Height	806 mm
	Weight	4.05t
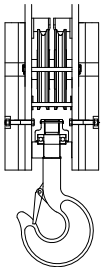	50t load hook	Optional
	Length	1970 mm
	Width	700 mm
	Height	806 mm
	Weight	2.65t
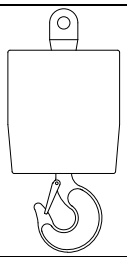	16t load hook	Optional
	Length	1156 mm
	Width	530 mm
	Height	530 mm
	Weight	0.9t

Note:

1. Figures in the above table are schematic diagrams that are not drawn in fixed proportions. Dimensions shown are general boundary dimensions.
2. Packaging weight is not included. Weights might be different from what are listed in the above table due to manufacturing error.
3. Dimensions of actual products shall prevail if dimensions and weights differ from what are listed above due to parts improvement.

3. Lifting performance

3.1. Lifting performance of heavy main boom (S)

Code	G66A	G65	G13	G14AS	G14B	G14C
Length	12	12	6	12	12	12
39	1	1	0	0	0	0
45	1	1	1	0	0	0
51	1	1	0	1	0	0
57	1	1	1	1	0	0
63	1	1	0	1	1	0
69	1	1	1	1	1	0
75	1	1	0	1	2	0
81	1	1	1	1	2	0
87	1	1	0	1	2	1
93	1	1	1	1	2	1

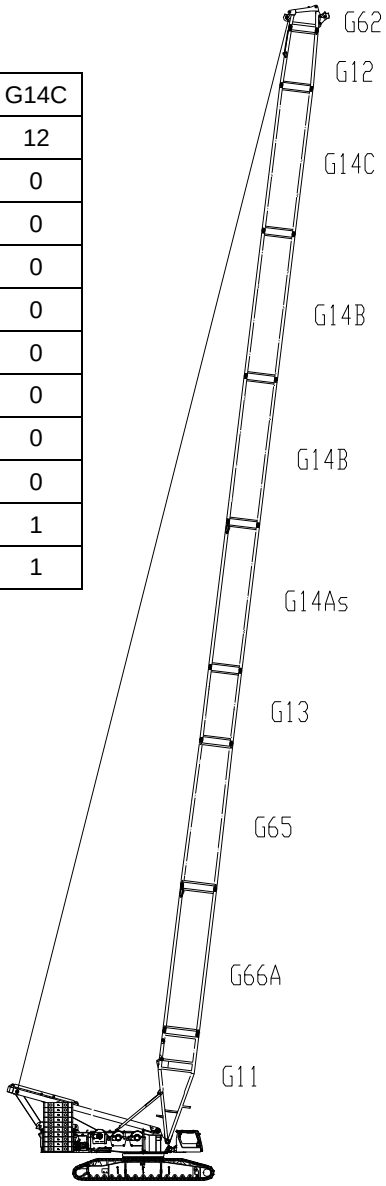

Note:

1. Main boom pivot section (G11-9m), main boom head section (G12-4.8m), and heavy main boom head (G62-1.2m) are not labeled in the above table.
2. Combination mode of boom section is the same with the combination mode of SDB-1/2.

Figure 8 Combination of boom section of S (39m-93m)

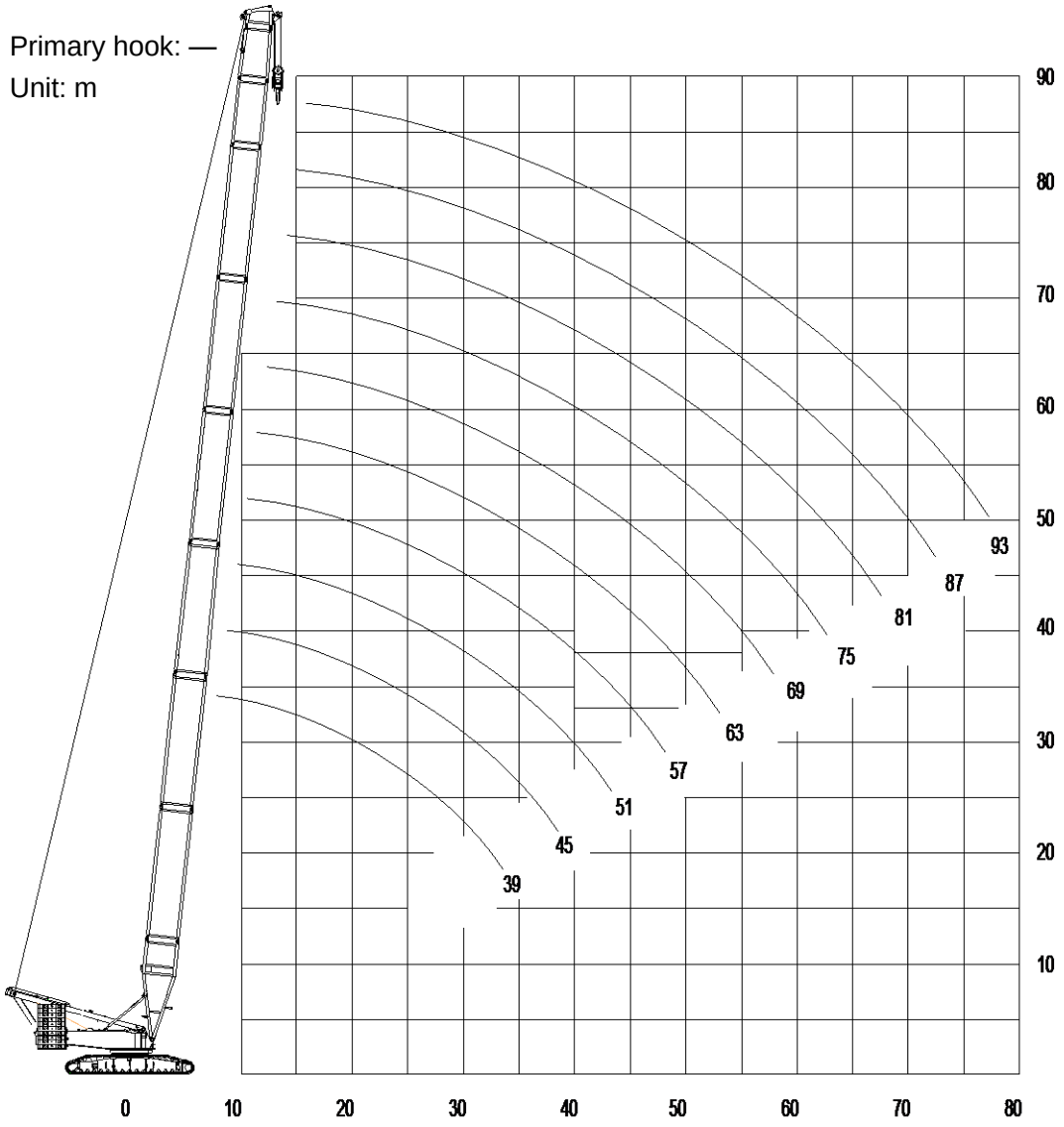

Figure 9 Hoisting height characteristic curve of S (39m-93m)

Lifting capacity chart of S

Rear counterweight: 210t Central counterweight: 60t											
Radius（m）	Main boom length（m）										Radius（m）
	39	45	51	57	63	69	75	81	87	93	
7	600										7
8	557	520									8
9	479	452	428	405							9
10	420	398	379	361	344	329					10
12	374	356	340	325	311	297	285	274			12
14	336	321	308	294	283	271	261	251	242	232	14
16	279	268	257	248	239	230	222	213	207	199	16
18	232	228	221	213	206	198	192	185	180	173	18
20	195	194	192	185	180	174	168	162	158	152	20
22	167	166	166	164	159	154	149	144	140	135	22
24	146	145	145	144	142	137	134	129	125	121	24
26	129	128	128	127	126	124	120	116	113	109	26
28	115	114	114	113	113	112	109	105	102	98.4	28
30	104	103	102	101	101	99.9	99.1	95.4	93	89.4	30
32	93.8	93.1	92.5	91.5	91.2	90.1	89.6	87.1	84.9	81.6	32
34	85.5	84.8	84.2	83.1	82.8	81.7	81.2	79.8	77.8	74.6	34
36	78.3	77.6	77	75.9	75.6	74.5	74	72.8	71.5	68.4	36
38	71.9	71.3	70.7	69.6	69.3	68.2	67.6	66.4	65.8	62.9	38
40		65.7	65.1	64.1	63.7	62.6	62	60.8	60.5	57.8	40
44		60.7	60.2	59.1	58.8	57.6	57.1	55.8	55.5	53.3	44
48			51.7	50.7	50.4	49.2	48.7	47.4	47	45.4	48
52				43.8	43.5	42.3	41.3	40.2	40.1	38.3	52
56				38	37.7	36.4	35.3	34.6	33.4	32.7	56
60					30.7	28.6	27.4	26.5	25.5	25.4	60
64						21.7	20.5	19.8	19.7	18.5	64
68							17.5	15.7	15.2	13.8	68
72								11.9	11.9	10.3	72

3.2. Lifting performance of light main boom (SL)

Code	G66A	G65	G13	G14AS	G14B	G14C	G26	G30	G26
Length	12	12	6	12	12	12	12	6	12
72	1	1	0	1	1	0	0	0	0
78	1	1	1	1	1	0	0	0	0
84	1	1	0	1	1	1	0	0	0
90	1	1	1	1	1	1	0	0	0
96	1	1	0	1	2	1	0	0	0
102	1	1	1	1	2	1	0	0	0
108	1	1	0	1	1	1	0	0	2
114	1	1	0	0	1	1	1	1	2

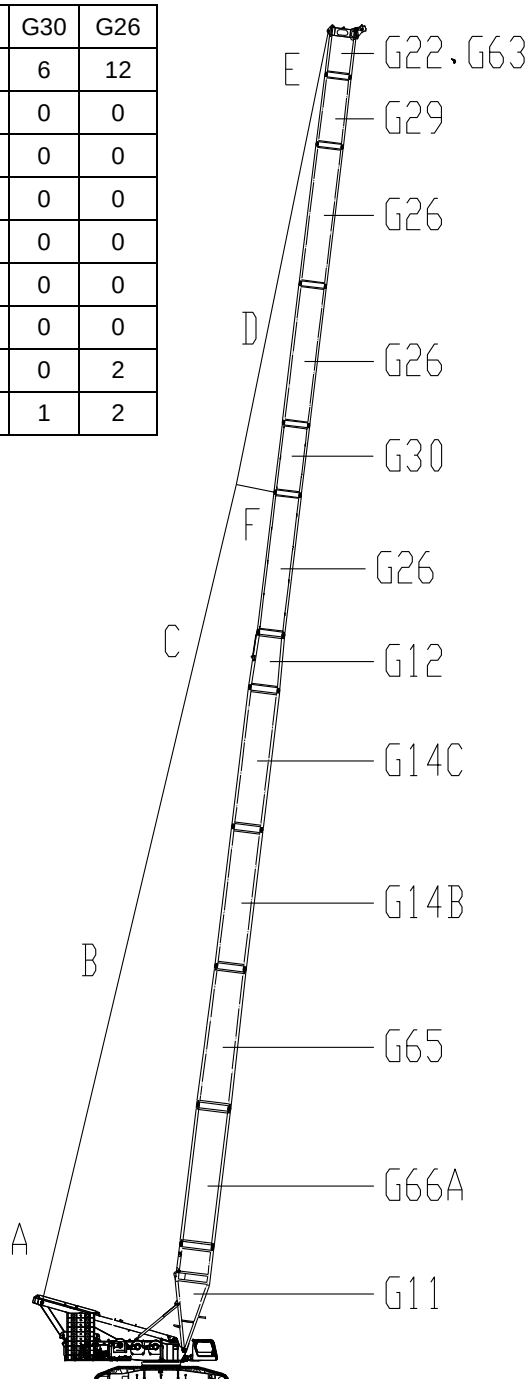

Note: Main boom pivot section (G11-9m), main boom head (G12-4.8m), luffing jib reducing section (G29-6m), and luffing jib head (G22-4.2m) are not labeled in the above table.

Figure 10 Combination of boom section of SL (72m-114m+7m)

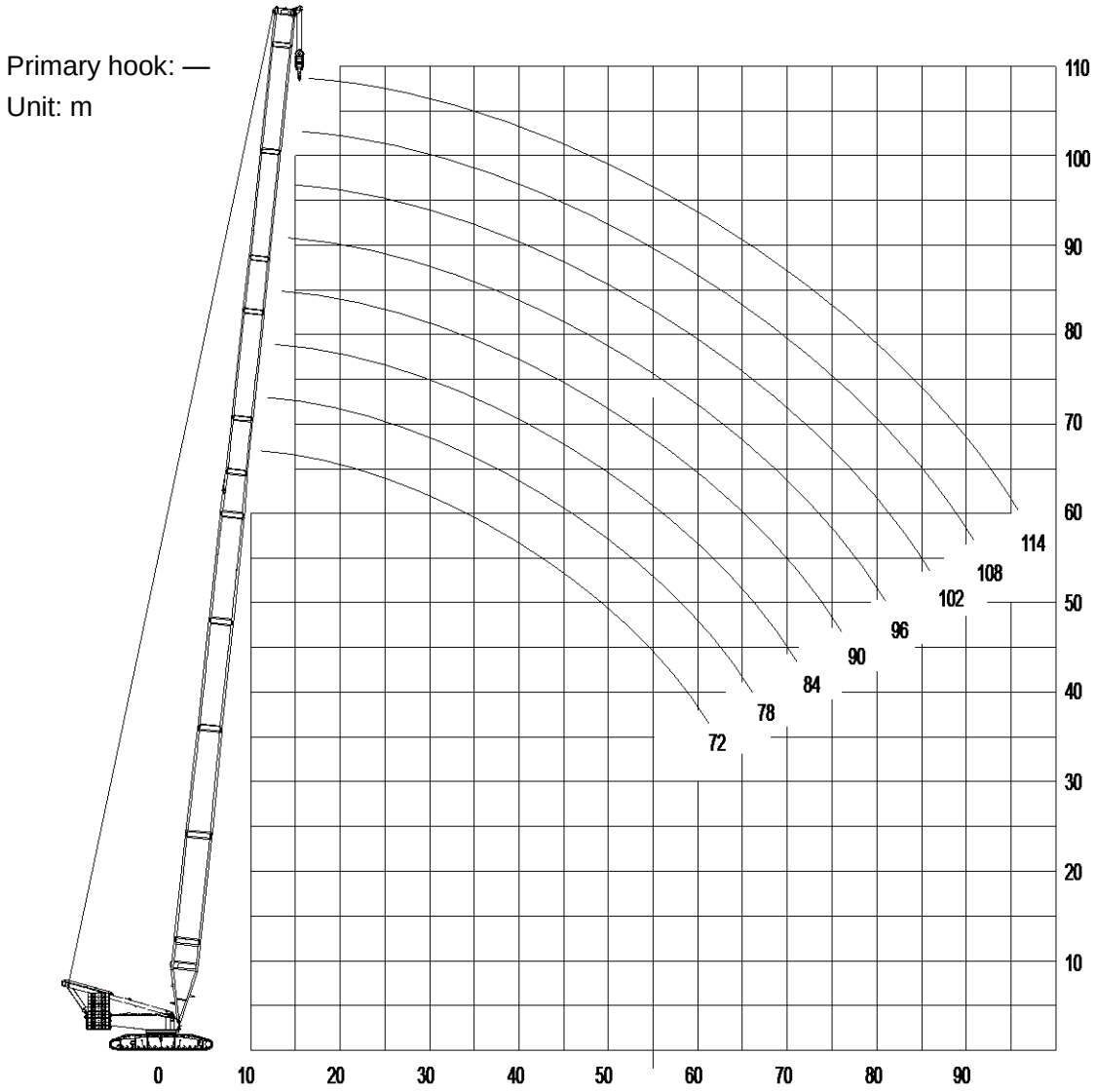

Figure 11 Hoisting height characteristic curve of SL (72m-114m)

Lifting capacity chart of SL

Rear counterweight: 210t Central counterweight: 60t									
Radius (m)	Main boom length（m）								Radius (m)
	72	78	84	90	96	102	108	114	
11	330								11
12	294	287	284						12
14	243	236	233	228	210				14
16	204	197	197	192	189	180	160	136	16
18	173	170	168	165	161	161	150	134	18
20	153	150	146	144	141	141	138	128	20
22	134	131	131	126	126	125	125	122	22
24	119	117	114	112	112	110	110	109	24
26	107	105	104	102	99.3	99.3	99.3	97.5	26
28	97.5	94.7	94.7	91.8	90.1	90.1	90.1	87.2	28
30	89	87.2	85.5	82.6	82.6	80.9	80.9	80.9	30
32	80.9	78	78	75.2	75.2	73.4	73.4	73.4	32
34	73.4	72.3	70.6	69.5	67.7	67.7	67.7	67.7	34
36	67.7	66	66	63.1	63.1	61.3	63.1	61.3	36
38	61.3	60.3	60.3	58.5	57.4	57.4	57.4	56.7	38
40	57.4	55.7	55.7	53.9	52.8	52.8	52.8	52.8	40
44	48.2	46.4	46.4	45.4	44.7	43.6	45.4	45.4	44
48	41.8	40.1	40.1	37.9	37.9	37.2	39	37.9	48
52	36.2	34.4	34.4	32.6	31.6	31.6	33.3	32.6	52
56	31.6	29.8	28.7	26.9	26.9	26.9	28	28	56
60	26.9	25.2	25.2	23.4	22.3	22.3	24.1	23.4	60
64	23.4	21.9	21.3	19.5	19.1	18.4	20.6	19.5	64
68		18.4	18.4	16.7	16	16	17.3	16.7	68
72			14.9	13.8	13.1	13.1	14.5	13.8	72
76				11.4	10.3	10.3	12.1	11.4	76

3.3. Lifting performance of superlift heavy main boom (SDB1/2)

Code	G67	G69	G68	G66A	G66	G65	G13	G14AS	G14B	G14C
Length	12	12	12	12	12	12	6	12	12	12
39	0	0	0	1	0	1	0	0	0	0
45	0	0	0	1	0	1	1	0	0	0
51	0	0	0	1	0	1	0	1	0	0
57	0	0	0	1	0	1	1	1	0	0
63	0	0	0	1	0	1	0	1	1	0
69	0	0	0	1	0	1	1	1	1	0
75	0	0	0	1	0	1	0	1	2	0
81	0	0	0	1	0	1	1	1	2	0
87	0	0	0	1	0	1	0	1	2	1
93	0	0	0	1	0	1	1	1	2	1
99	1	1	1	1	1	1	0	1	0	0
105	1	1	1	1	1	1	1	1	0	0
111	1	1	1	1	1	1	0	1	1	0
117	1	1	1	1	1	1	1	1	1	0
123	1	1	1	1	1	1	0	1	2	0
129	1	1	1	1	1	1	1	1	2	0
135	1	1	1	1	1	1	0	1	2	1
141	1	1	1	1	1	1	1	1	2	1

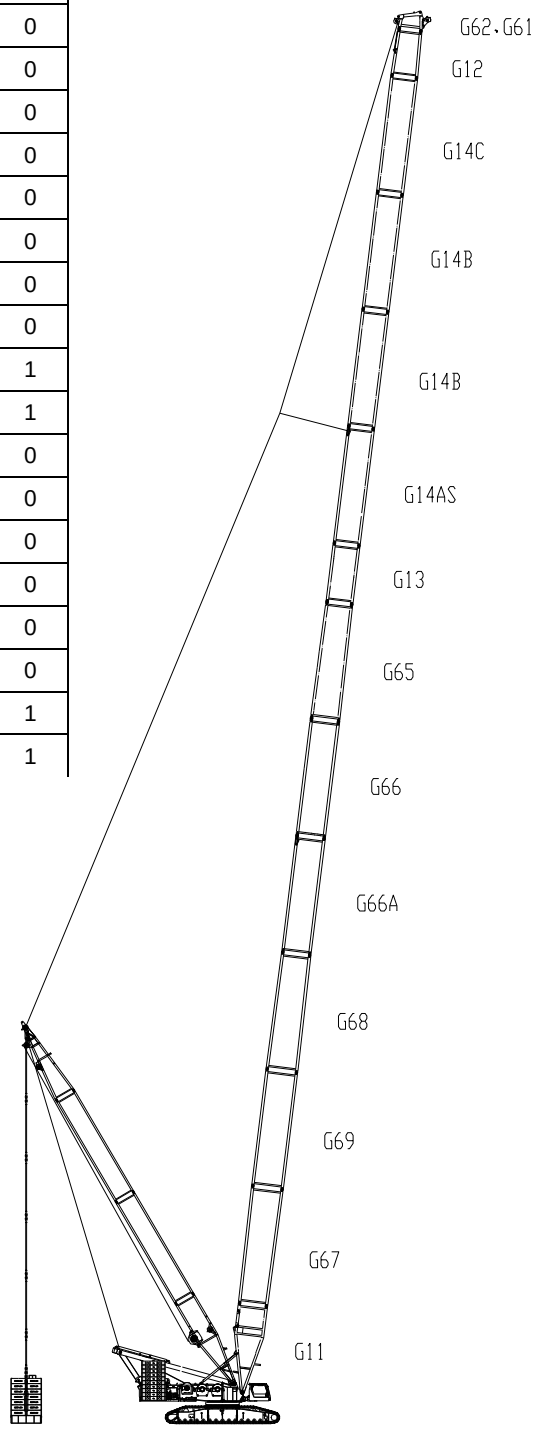

Note: 1. Main boom pivot section (G11-9m), main boom head (G12-4.8m), and heavy main boom head (G62/G61-1.2m) are not labeled in the above table.

2. Combination mode of boom section is the same with the combination mode of S.

Figure 12 Combination of boom section of SDB-1/2 (39m-141m)

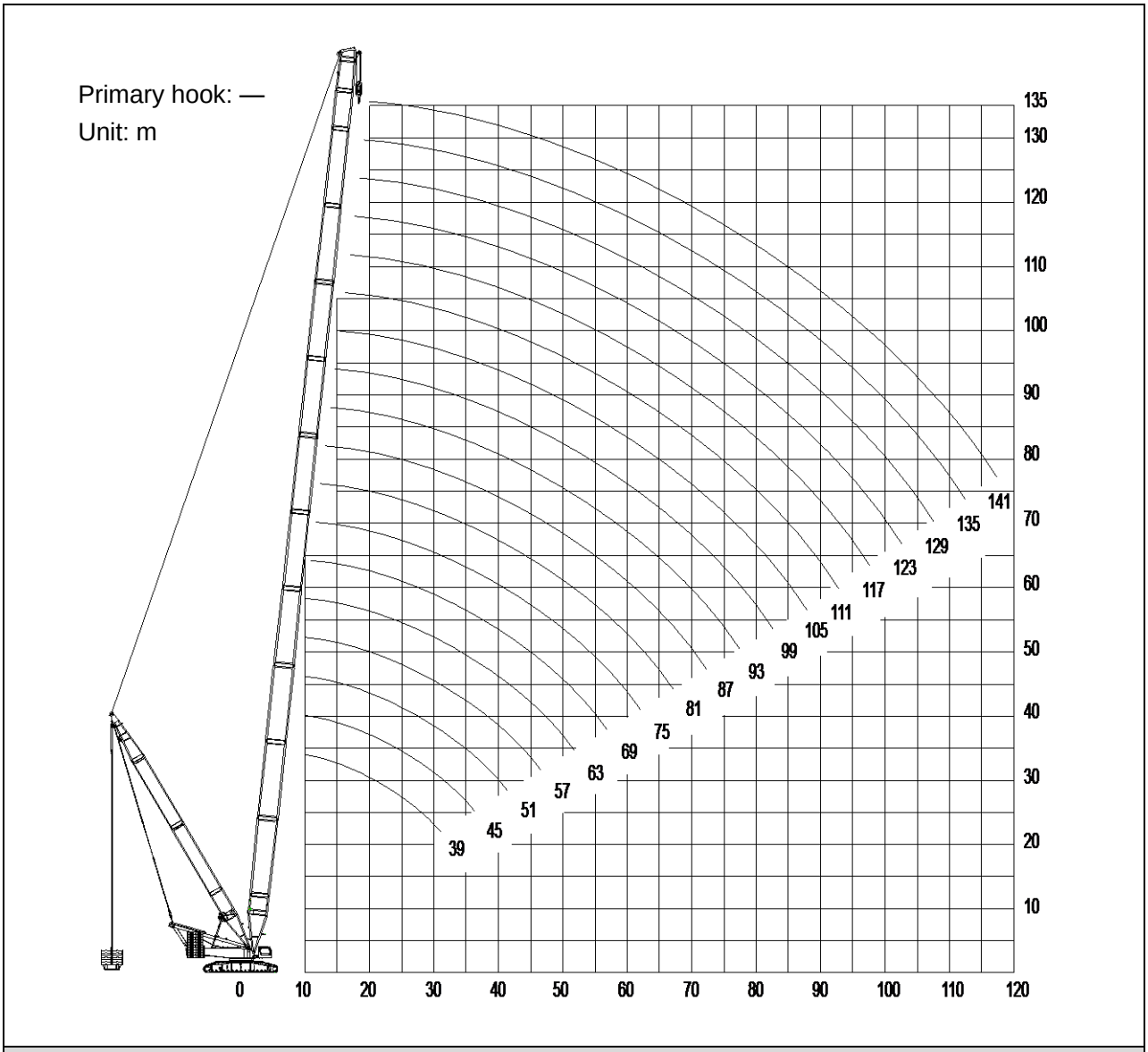

Figure 13 Hoisting height characteristic curve of SDB-1/2 (39m-141m)

Lifting capacity charts of SDB-1

SDB-1 Rear counterweight: 210t Central counterweight: 60t Superlift radius: 20m Suspended ballast: 300t										
Radius (m)	Main boom length (m)									Radius (m)
	39	45	51	57	63	69	75	81	87	
8	650	650								8
9	650	650	647							9
10	650	650	647	591	534					10
11	650	650	647	591	534	476	416			11
12	650	650	647	591	534	476	416	386	356	12
14	620	650	647	591	534	476	416	386	356	14
16	575	614	612	591	534	476	416	386	356	16
18	545	545	544	543	534	476	416	386	356	18
20	466	483	489	488	491	476	416	386	356	20
22	416	432	443	442	445	444	416	386	356	22
24	375	389	401	404	407	404	403	386	356	24
26	340	353	365	372	374	371	370	365	356	26
28	310	323	333	342	346	342	342	337	333	28
30	284	296	306	314	321	317	317	313	309	30
32	261	272	282	290	299	296	296	291	288	32
34	240	252	261	268	280	276	277	273	269	34
36		233	242	249	260	259	260	256	253	36
38		216	225	232	243	244	244	241	238	38
40		200	209	216	227	230	231	227	224	40
44			182	189	200	204	207	204	201	44
48				166	177	181	184	184	181	48
52					157	161	167	167	165	52
56					140	144	151	150	150	56
60						129	136	136	136	60
64							123	124	126	64
68								112	114	68
72									104	72
76									94	76

SDB-1 Rear counterweight: 210t Central counterweight: 60t Superlift radius: 20m Suspended ballast: 300t										
Radius (m)	Main boom length (m)									Radius (m)
	93	99	105	111	117	123	129	135	141	
14	325	294	278							14
16	325	294	278	263	231	220				16
18	325	294	278	263	231	220	204	178	160	18
20	325	294	278	263	231	220	204	178	160	20
22	325	294	278	263	231	220	204	178	160	22
24	325	294	278	263	231	220	204	178	160	24
26	325	294	278	263	231	220	204	178	160	26
28	325	294	278	263	231	220	202	176	158	28
30	304	294	276	263	231	220	200	174	156	30
32	284	279	268	263	231	220	198	172	154	32
34	265	261	258	254	231	220	196	170	152	34
36	249	245	241	238	231	220	195	168	150	36
38	234	230	226	224	220	218	194	167	149	38
40	221	217	213	211	208	205	193	166	148	40
44	198	194	191	189	185	183	180	165	147	44
48	178	175	172	170	167	165	161	160	145	48
52	162	159	155	154	151	149	146	144	141	52
56	148	144	142	140	137	135	132	131	128	56
60	134	131	129	128	125	123	120	119	116	60
64	123	121	119	117	115	113	110	109	106	64
68	114	112	109	108	105	104	101	99.7	97	68
72	103	102	100	99.5	96.9	95.4	92.7	91.5	88.9	72
76	94.8	94.8	92.8	92	89.4	88	85.3	84.2	81.6	76
80	86.2	86.3	86.3	84.2	82.7	81.3	78.7	77.6	75	80
84		78.6	78.8	77.7	75.7	75.2	72.6	71.6	69.1	84
88			71.6	72.4	70.4	69.6	67.1	66.1	63.6	88
92			64.9	66.3	65.9	63.9	62.1	61.1	58.6	92
96				60.2	60	59.9	57.4	56.5	54	96
100					54.3	55.1	53.1	52.2	49.8	100

Lifting capacity charts of SDB-2 (optional)

SDB-2	Rear counterweight: 210t Central counterweight: 60t Superlift radius: 20m Suspended ballast: 400t									
Radius (m)	Main boom length (m)									Radius (m)
	39	45	51	57	63	69	75	81	87	
8	800	755								8
9	800	755	647							9
10	790	755	647	591	534					10
11	785	750	647	591	534	476	416			11
12	772	745	647	591	534	476	416	386	356	12
14	750	735	647	591	534	476	416	386	356	14
16	688	694	647	591	534	476	416	386	356	16
18	586	607	626	591	534	476	416	386	356	18
20	519	537	554	562	534	476	416	386	356	20
22	464	481	496	509	512	476	416	386	356	22
24	418	434	448	460	469	467	416	386	356	24
26	380	394	407	418	431	430	416	386	356	26
28	346	360	372	382	396	398	400	386	356	28
30	317	330	341	351	364	370	372	370	356	30
32	291	304	315	324	337	343	347	346	344	32
34	268	281	291	300	312	318	326	324	323	34
36		260	270	279	291	296	304	305	303	36
38		242	252	260	272	276	285	287	286	38
40		224	235	243	254	259	267	270	270	40
44			204	213	224	228	236	238	241	44
48				187	199	203	210	212	215	48
52					177	181	188	190	193	52
56					157	162	169	171	173	56
60						145	153	155	157	60
64							138	140	142	64
68								127	129	68
72									118	72
76									107	76

SDB-2	Rear counterweight: 210t Central counterweight: 60t Superlift radius: 20m Suspended ballast: 400t									
Radius (m)	Main boom length (m)									Radius (m)
	93	99	105	111	117	123	129	135	141	
14	325	294	278							14
16	325	294	278	263	231	220				16
18	325	294	278	263	231	220	204	178	160	18
20	325	294	278	263	231	220	204	178	160	20
22	325	294	278	263	231	220	204	178	160	22
24	325	294	278	263	231	220	204	178	160	24
26	325	294	278	263	231	220	204	178	160	26
28	325	294	278	263	231	220	202	176	158	28
30	325	294	276	263	231	220	200	174	156	30
32	325	294	268	263	231	220	198	172	154	32
34	321	294	258	254	231	220	196	170	152	34
36	302	294	255	250	231	220	195	168	150	36
38	284	282	250	245	231	219	193	166	148	38
40	269	266	245	240	231	218	193	165	147	40
44	242	239	235	233	230	216	191	164	146	44
48	216	216	213	211	207	205	189	162	144	48
52	194	194	193	191	188	186	183	161	143	52
56	175	175	176	175	172	170	167	159	141	56
60	158	158	159	160	158	156	153	151	139	60
64	143	144	144	145	145	143	140	139	136	64
68	130	131	131	132	132	132	129	128	125	68
72	119	119	119	121	121	121	120	118	116	72
76	108	109	109	110	110	111	110	110	107	76
80	98.6	99.2	99.6	101	101	101	101	102	99	80
84		90.5	91	92.3	92.1	92.8	92.3	93	91.9	84
88			83	84.5	84.2	85	84.5	85.2	84.3	88
92			75.6	77.2	77	77.8	77.3	78	77.1	92
96				70.4	70.4	71.2	70.7	71.5	70.6	96
100					64.1	65.1	64.6	65.4	64.5	100

3.4. Lifting performance of superlift light main boom (SLDB)

Code	G67	G69	G68	G66A	G66	G65	G13	G14AS	G13	G14B
Length	12	12	12	12	12	12	6	12	0	12
90	1	1	1	1	0	1	1	0	0	0
96	1	1	1	1	1	1	0	0	0	0
102	1	1	1	1	1	1	1	0	0	0
108	1	1	1	1	1	1	0	1	0	0
114	1	1	1	1	1	1	1	1	0	
120	1	1	1	1	1	1	0	1	0	1
126	1	1	1	1	1	1	0	1	1	1
132	1	1	1	1	1	1	0	1	0	2
138	1	1	1	1	1	1	1	1	0	2
144	1	2	1	1	1	1	0	1	0	2
150	1	2	1	1	1	1	0	1	1	2

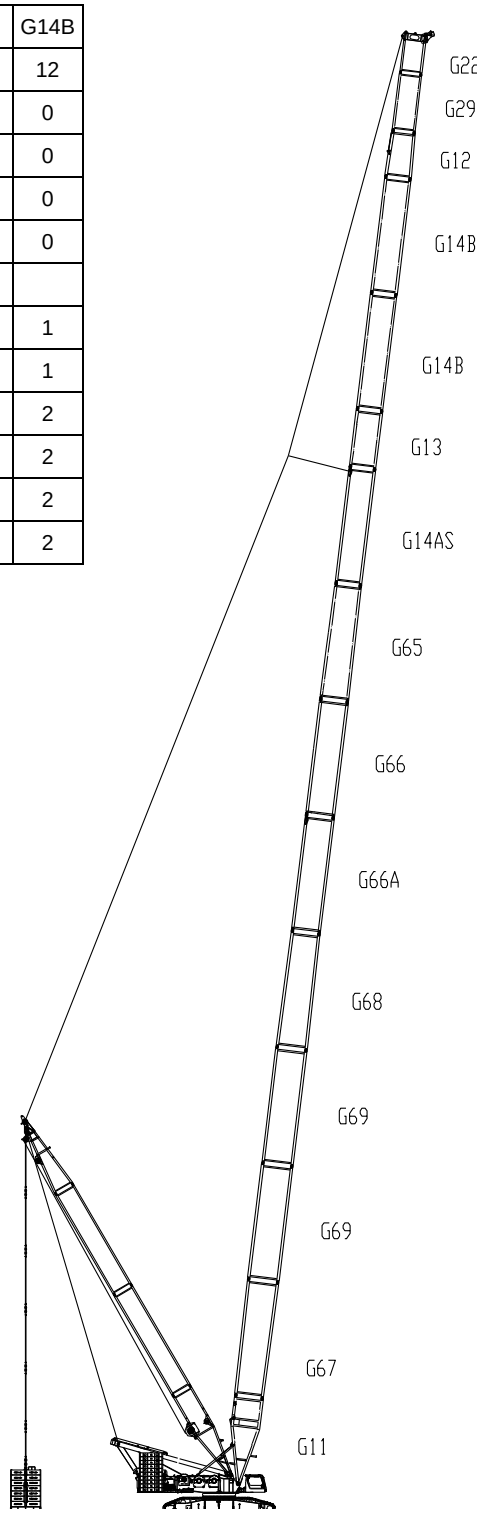

Note: Main boom pivot section (G11-9m), main boom head (G12-4.8m), luffing jib reducing section (G29-6m), and luffing jib head (G22-4.2m) are not labeled in the above table.

Figure 14 Combination of boom section of SLDB (90m-150m)

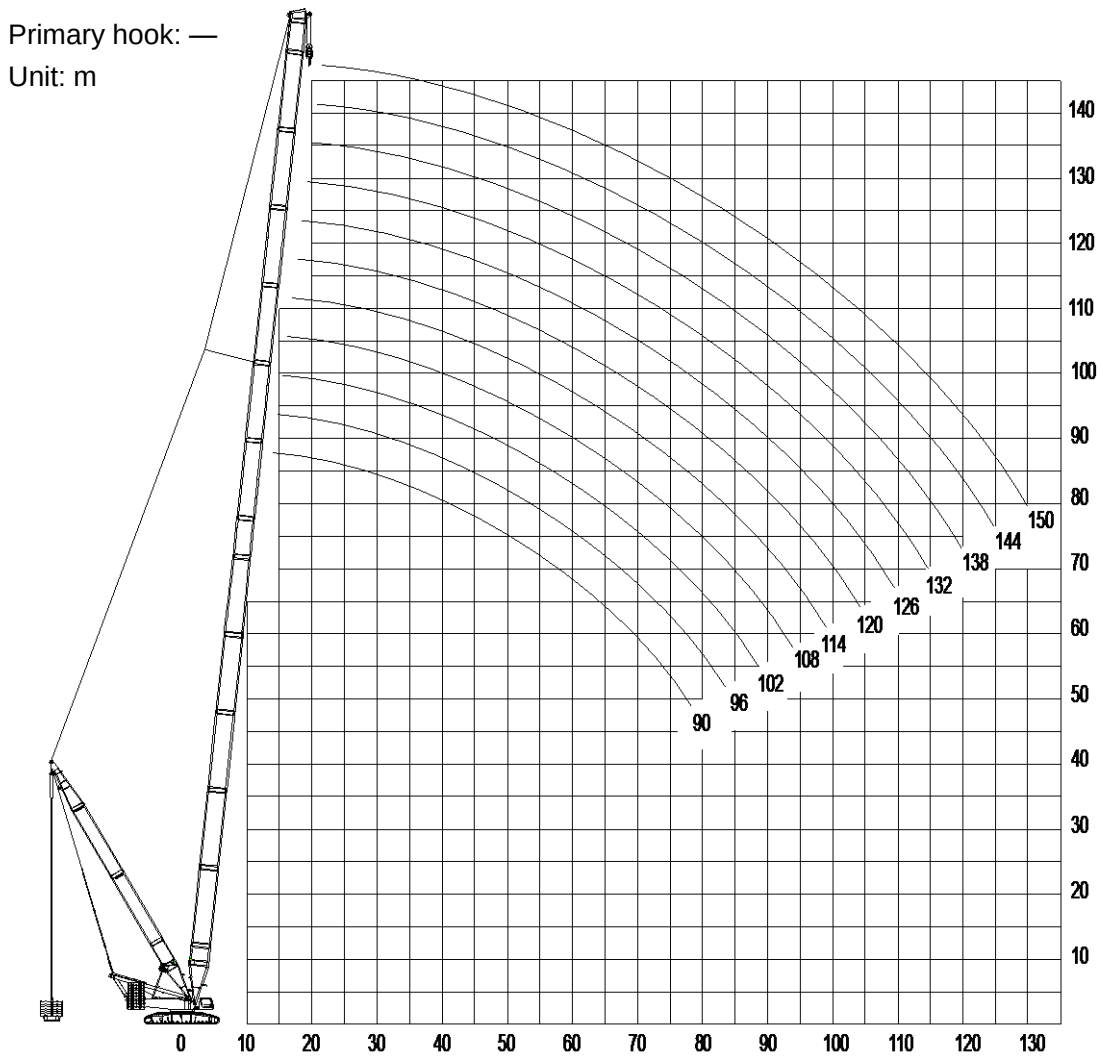

Figure 15 Hoisting height characteristic curve of SLDB (90m-150m)

Lifting capacity chart of SLDB

Rear counterweight: 210 t Central counterweight: 60 t Radius of suspended ballast: 20 m
Suspended ballast: 300 t

Radius (m)	Main boom length (m)											Radius (m)
	90	96	102	108	114	120	126	132	138	144	150	
14	325	294	263	263								14
16	325	294	263	263	231	231	231					16
18	325	294	263	263	231	231	231	199	183	174	155	18
20	325	294	263	263	231	231	231	199	183	174	155	20
22	325	294	263	263	231	231	231	199	184	174	155	22
24	325	294	263	263	231	231	231	199	184	174	155	24
26	325	294	263	263	231	231	231	199	184	174	154	26
28	325	294	263	263	231	231	231	199	184	174	154	28
30	306	294	263	263	231	231	231	199	184	173	154	30
32	285	281	263	263	231	231	231	199	183	173	153	32
34	266	263	259	255	231	231	231	199	183	172	153	34
36	249	246	243	239	231	231	230	199	183	172	152	36
38	232	232	228	225	222	219	216	199	182	171	151	38
40	217	217	215	212	209	207	203	199	181	171	151	40
44	192	192	191	189	186	184	181	179	176	169	149	44
48	172	171	170	169	167	166	163	161	158	155	148	48
52	155	154	153	151	150	150	147	145	142	139	136	52
56	140	139	138	137	136	136	133	132	129	126	123	56
60	128	127	126	125	123	123	122	120	117	114	112	60
64	117	116	115	114	113	112	111	110	107	104	102	64
68	107	107	106	104	103	103	101	100	97.9	95.1	92.5	68
72	99.1	98.3	97.2	95.9	94.7	94.4	93.1	92.2	89.8	87	84.5	72
76	91.7	90.9	89.8	88.5	87.2	87	85.6	84.9	82.4	79.8	77.2	76
80		84.3	83.1	81.8	80.6	80.3	79	78.3	75.8	73.2	70.8	80
84		78.3	77.1	75.8	74.6	74.2	73	72.2	69.9	67.3	64.9	84
88			71.7	70.4	69.1	68.9	67.6	66.7	64.4	61.8	59.4	88
92				65.4	64.2	63.9	62.6	61.6	59.3	56.8	54.5	92
96					59.6	59.4	58.1	57	54.7	52.3	49.9	96
100					55.5	55.2	53.9	52.7	50.5	48	45.7	100

3.5. Lifting performance of jib on light main boom for wind plant (SLHS-1/2)

Code	G66A	G65	G13	G14AS	G14B	G14C	G26	G30	G26	G23
Length	12	12	6	12	12	12	12	6	12	3
90	1	1	1	1	1	1	0	0	0	0
93	1	1	1	1	1	1	0	0	0	1
96	1	1	0	1	2	1	0	0	0	0
99	1	1	0	1	2	1	0	0	0	1
102	1	1	1	1	2	1	0	0	0	0
105	1	1	0	1	1	1	0	1	1	1
108	1	1	0	1	1	1	0	0	2	0
111	1	1	0	0	1	1	0	0	3	1
114	1	1	0	0	1	1	1	1	2	0

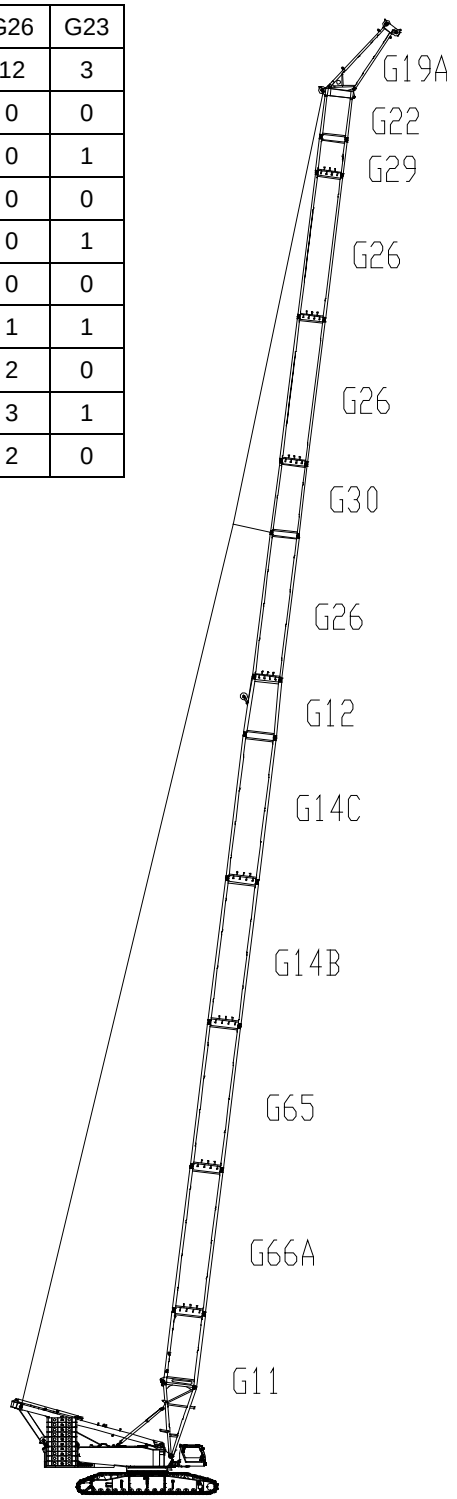

Note: Main boom pivot section (G11-9m), main boom head (G12-4.8m), luffing jib reducing section (G29-6m), and luffing jib head (G22-4.2m) are not labeled in the above table.

Figure 16 Combination of boom section of SLHS-1 (90m-114m+7m)

Code	G66A	G65	G14B	G14C	G26	G30	G26	G23
Length	12	12	12	12	12	6	12	3
90	1	1	1	1	0	1	1	0
93	1	1	1	1	0	1	1	1
96	1	1	1	1	0	0	2	0
99	1	1	1	1	0	0	2	1
102	1	1	1	1	0	1	2	0
105	1	1	1	1	0	1	2	1
108	1	1	1	1	0	0	3	0
111	1	1	1	1	0	0	3	1
114	1	1	1	1	1	1	2	0

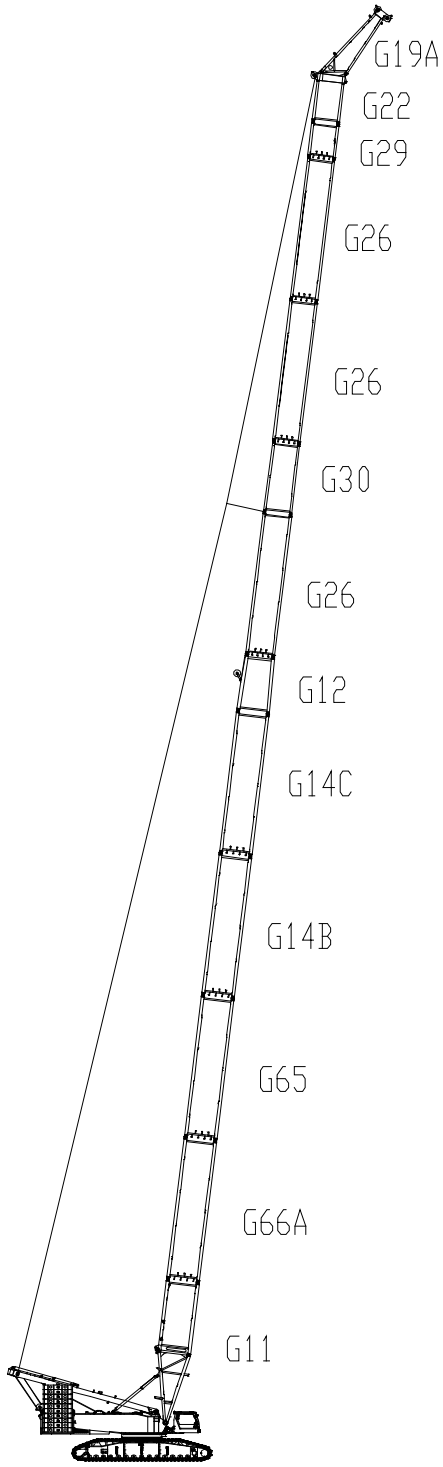

Note: Main boom pivot section (G11-9m), main boom head (G12-4.8m), luffing jib reducing section (G29-6m), and luffing jib head (G22-4.2m) are not labeled in the above table.

Figure 17 Combination of boom section of SLHS-2 (9m-114m+7m)

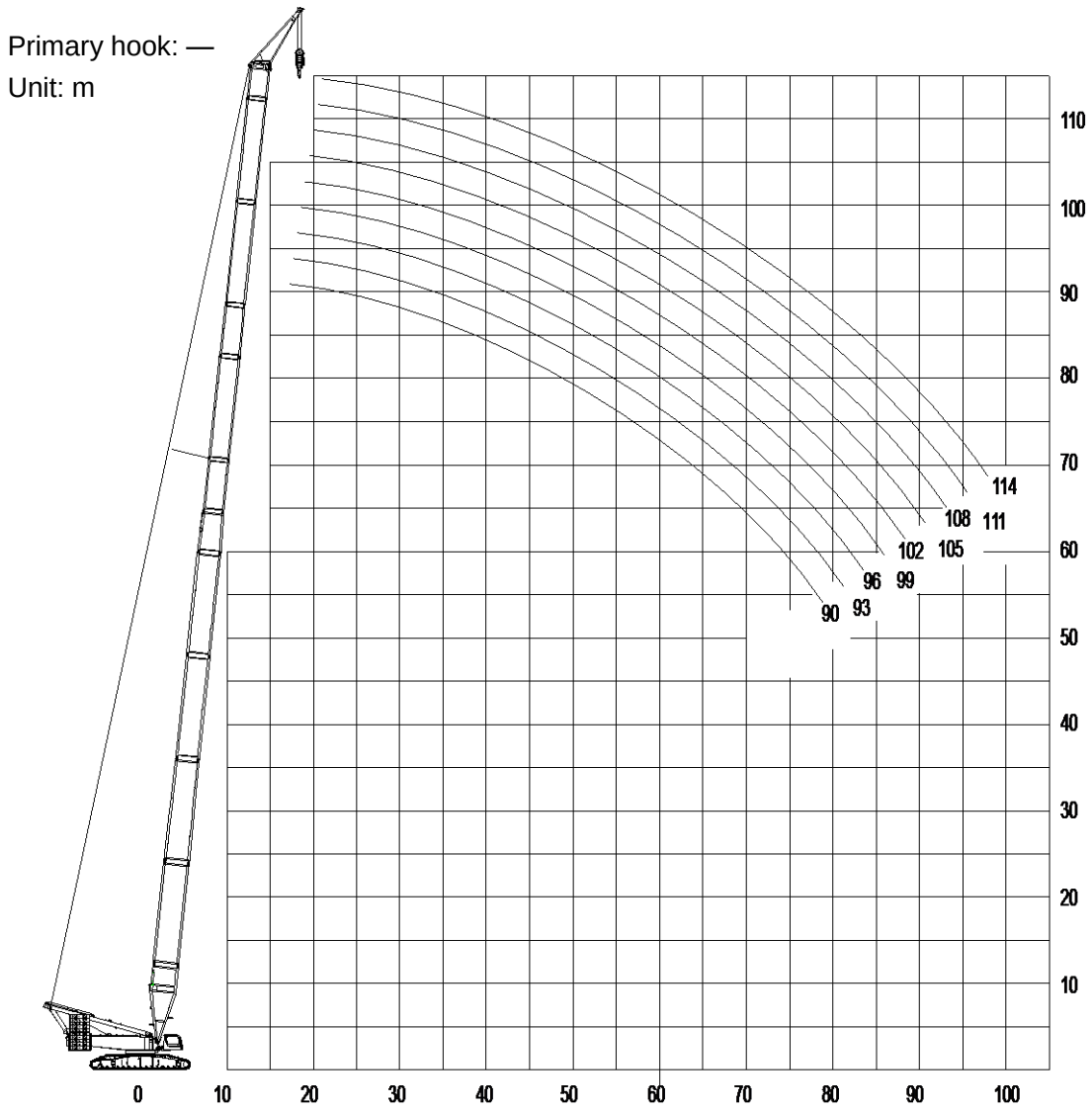

Figure 18 Hoisting height characteristic curve of SLHS-1/2 (90m-114m+7m)

Lifting capacity chart of SLHS

Rear counterweight: 210 t Central counterweight: 60 t Jib head: 7m										
Radius (m)	Main boom length (m)									Radius (m)
	90	93	96	99	102	105	108	111	114	
15	180	180	180							15
16	180	177	174	171						16
17	168	166	164	161	152	142	132			17
18	159	157	155	152	148	141	131	120	110	18
19	150	148	146	144	143	140	129	118	109	19
20	142	140	138	136	135	133	127	116	108	20
22	128	126	125	123	122	120	121	114	106	22
24	116	114	113	111	110	109	109	108	103	24
26	105	104	103	101	101	98.9	100	98.4	97.6	26
28	96.5	95	94.1	92.5	92.1	90.5	91.6	90.2	89.6	28
30	88.5	87.2	86.2	84.9	84.5	83	84.4	82.8	82.3	30
32	81.5	80.2	79.4	78.1	77.8	76.5	77.8	76.5	76	32
34	75.2	74.1	73.4	72	71.8	70.5	72	70.7	70.2	34
36	69.7	68.5	67.9	66.6	66.4	65.2	66.8	65.5	65	36
38	64.7	63.5	62.9	61.7	61.6	60.3	62	60.7	58.4	38
40	60	59.1	58.4	57.3	57.1	56.1	57.6	54.5	52.1	40
44	51.3	51	50.7	49.5	49.5	48.5	48.1	43	43.7	44
48	44.3	43.9	43.8	43	43	41.9	39.7	39.6	37.5	48
52	38.4	37.8	37.8	37.4	37.4	36.4	33.2	32.2	31.1	52
56	33.5	32.3	32.3	32.3	32.3	31.6	28.5	27.4	26.4	56
60	28.8	28	28	27.5	28	26.7	23.8	22.4	21.3	60
64	24.6	24.1	24.1	23.3	23.3	23.3	20.4	19.6	18.6	64
68	21.2	20.7	20.7	19.9	19.9	19.9	18.2	17.2	15.2	68
72	17.8	17.8	17.8	16.5	17.3	16.5	14.6	14.8	13.6	72
76	15.2	14.4	14.4	14.4	14.4	13.6	12.7	12.2	11.4	76
80	13.1	12.3	12.3	11.8	11.8	11	9.6	9.3	8.6	80
84	10.2	10.2	10.2	9.7	9.7	8.9	8	7.7	7	84
88		8.1	7.6	7.6	7.6	6.8	6.9	6.1	5.6	88

3.6. Lifting performance of SLHSDB-1

Code	G67	G69	G68	G66A	G66	G65	G13	G14AS	G14B	G14C	G23
Length	12	12	12	12	12	12	6	12	12	12	3
108	1	1	1	1	1	1	0	1	0	0	0
111	1	1	1	1	1	1	0	1	0	0	1
114	1	1	1	1	1	1	1	1	0	0	0
117	1	1	1	1	1	1	1	1	0	0	1
120	1	1	1	1	1	1	0	1	1	0	0
123	1	1	1	1	1	1	0	1	1	0	1
126	1	1	1	1	1	1	1	1	1	0	0
129	1	1	1	1	1	1	1	1	1	0	1
132	1	1	1	1	1	1	0	1	2	0	0
135	1	1	1	1	1	1	0	1	2	0	1
138	1	1	1	1	1	1	1	1	2	0	0
141	1	2	1	1	1	1	1	1	1	0	1
144	1	2	1	1	1	1	0	1	2	0	0
147	1	2	1	1	1	1	0	1	2	0	1
150	1	2	1	1	1	1	1	1	2	0	0
153	1	2	1	1	1	1	1	1	2	0	1
156	1	2	1	1	1	1	0	1	2	1	0
159	1	2	1	1	1	1	0	1	2	1	1

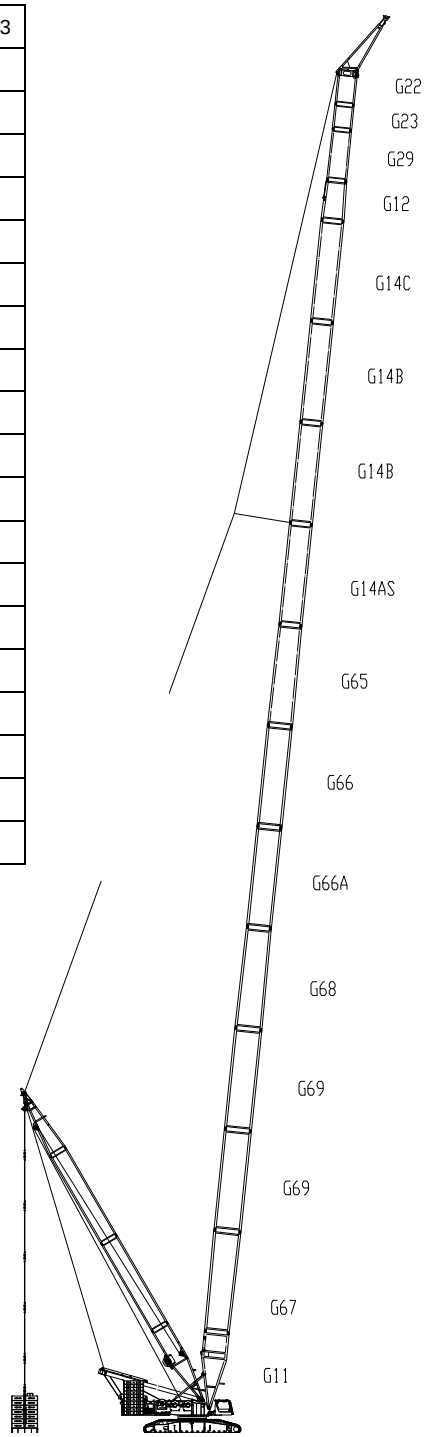

Note: Main boom pivot section (G11-9m), main boom head (G12-4.8m), luffing jib reducing section (G29-6m) and luffing jib head (G22-4.2m) are not labeled in the above table.

Figure 19 Combination of boom section of SLHSDB-1 (108m-159m+7m)

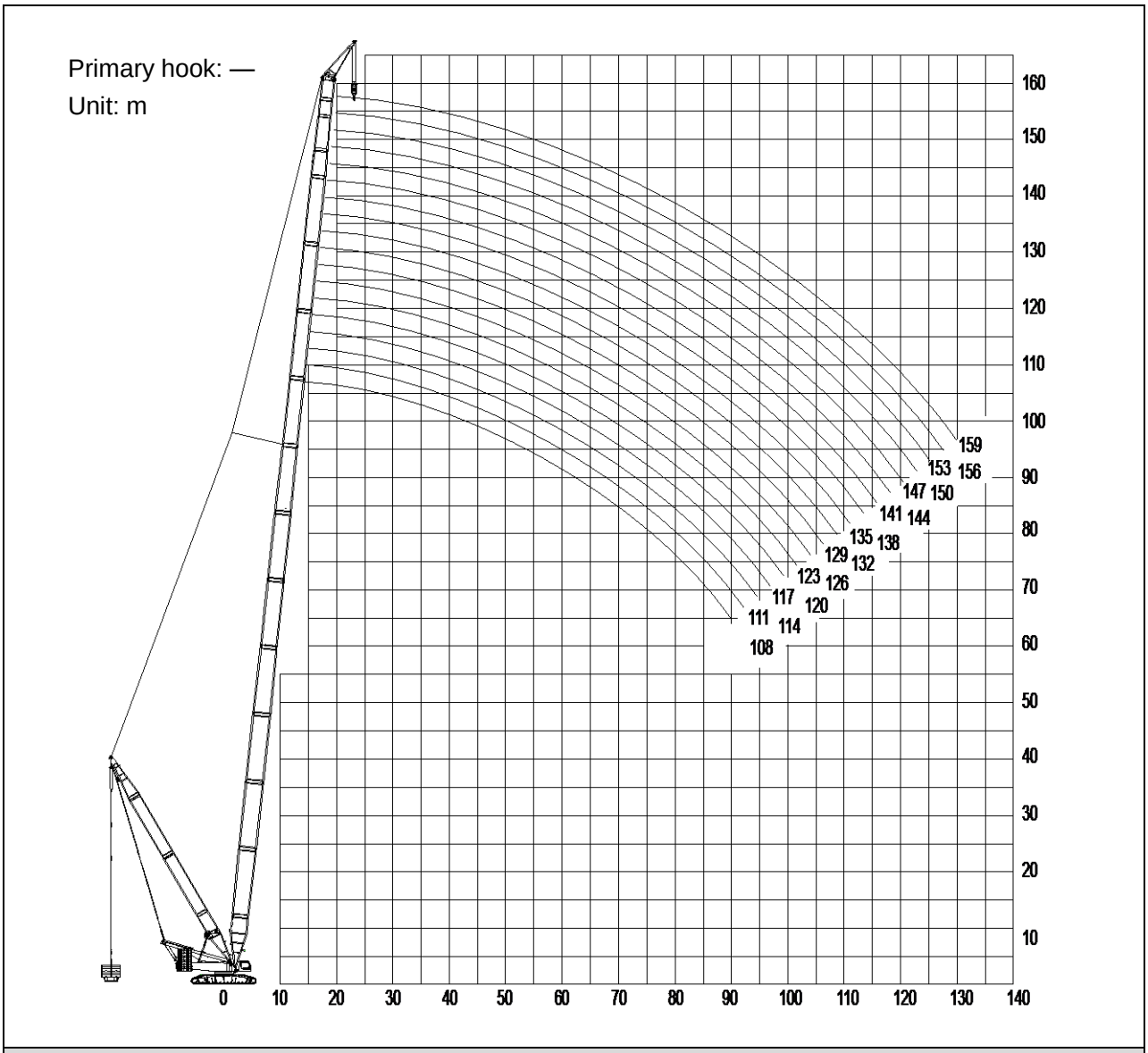

Figure 20 Hoisting height characteristic curve of SLHSDB-1 (108m-159m+7m)

Lifting capacity charts of SLHSDB-1

Superlift radius: 20m Rear counterweight: 210t Central counterweight: 60t Suspended ballast: 300t							
Radius (m)	Main boom length (m)						Radius (m)
	108	111	114	117	120	123	
19	180	180	180	180	180	180	19
20	180	180	180	180	180	180	20
22	180	180	180	180	180	180	22
24	180	180	180	180	180	180	24
26	179	180	180	180	180	180	26
28	176	177	178	179	179	180	28
30	174	174	175	176	176	177	30
32	171	172	173	173	174	175	32
34	169	169	170	171	171	172	34
36	166	167	168	169	169	170	36
38	164	164	165	166	167	168	38
40	162	162	163	164	165	166	40
44	157	158	159	160	161	162	44
48	154	154	155	156	157	158	48
52	150	151	150	150	149	149	52
56	136	136	135	135	135	134	56
60	127	126	125	125	125	125	60
64	116	115	114	114	114	114	64
68	106	106	105	105	105	104	68
72	97.6	97.3	96.5	96.1	96.1	95.7	72
76	90.1	89.8	89	88.6	88.6	88.2	76
80	83.4	83.1	82.2	81.9	81.9	81.5	80
84	77.4	77.1	76.2	75.9	75.8	75.4	84
88	71.9	71.6	70.7	70.4	70.3	69.9	88
92	66.9	66.6	65.7	65.4	65.3	64.9	92
96	62.3	62	61.1	60.8	60.7	60.3	96
100	56.7	57.2	56.8	56.6	56.5	56.1	100
104		51.8	51.5	51.9	52.2	52.2	104
108				46.9	47.6	47.8	108
112					42.9	43.1	112

Superlift radius: 20m Rear counterweight: 210t Central counterweight: 60t Suspended ballast: 300t							
Radius (m)	Main boom length (m)						Radius (m)
	126	129	132	135	138	141	
19	180	180					20
20	180	180	173	162			
22	180	180	173	162	157	156	22
24	180	180	173	162	157	156	24
26	180	180	173	162	158	156	26
28	180	180	173	162	158	156	28
30	178	178	173	162	158	156	30
32	175	176	173	162	157	156	32
34	173	174	173	162	155	155	34
36	171	171	172	162	153	153	36
38	168	169	170	162	151	151	38
40	166	167	167	162	149	150	40
44	162	163	164	161	146	146	44
48	159	160	160	160	143	142	48
52	148	148	148	147	140	137	52
56	133	133	133	132	131	128	56
60	123	122	122	121	119	117	60
64	113	112	111	110	109	106	64
68	103	103	102	101	99.4	97.2	68
72	94.8	94.2	93.7	92.8	91.2	89.1	72
76	87.3	86.8	86.3	85.4	83.9	81.8	76
80	80.6	80.1	79.6	78.8	77.2	75.2	80
84	74.5	74	73.5	72.7	71.2	69.1	84
88	69	68.4	68	67.2	65.7	63.6	88
92	64	63.3	62.9	62.1	60.6	58.6	92
96	59.3	58.6	58.2	57.5	56	54	96
100	55	54.3	53.9	53.2	51.7	49.7	100
104	50.9	50.1	49.9	49.2	47.7	45.7	104
108	46.7	46.6	46.2	45.5	44	42	108
112	42.6	42.8	42.7	42	40.6	38.6	112
116		38.5	39	38.8	37.3	35.3	116
120		34.4	34.9	35	34.3	32.3	120

Superlift radius: 20m Rear counterweight: 210t Central counterweight: 60t Suspended ballast: 300t							
Radius (m)	Main boom length (m)						Radius (m)
	144	147	150	153	156	159	
22	148	139	130	122			22
24	148	139	130	122	115	110	24
26	148	139	130	122	114	109	26
28	147	139	130	122	114	108	28
30	147	139	130	121	114	107	30
32	147	138	129	121	114	107	32
34	147	138	129	121	114	107	34
36	146	138	129	121	113	106	36
38	146	138	128	120	113	106	38
40	146	137	128	120	112	106	40
44	144	136	127	119	111	104	44
48	139	135	126	118	110	103	48
52	133	129	124	117	109	102	52
56	128	124	120	115	108	100	56
60	116	115	113	111	104	96.3	60
64	106	105	103	102	100	92.1	64
68	96.8	96.3	95.4	94.9	93	88.7	68
72	88.6	87.8	86.9	86.4	85	84.1	72
76	81.3	80.4	79.3	78.8	77.8	76.9	76
80	74.7	73.8	72.5	72.1	71.3	70.4	80
84	68.7	67.9	66.4	66	65.4	64.5	84
88	63.2	62.4	60.9	60.4	59.9	59.1	88
92	58.2	57.4	55.8	55.4	55	54.2	92
96	53.5	52.8	51.2	50.8	50.4	49.6	96
100	49.3	48.5	47	46.6	46.2	45.4	100
104	45.3	44.6	43.1	42.7	42.3	41.5	104
108	41.6	40.9	39.5	39.1	38.6	37.9	108
112	38.2	37.5	36.2	35.7	35.2	34.5	112
116	35	34.3	33.1	32.6	32.1	31.4	116
120	32	31.3	30.1	29.7	29.1	28.4	120

Superlift radius: 20m Rear counterweight: 210t Central counterweight: 60t Suspended ballast: 0t							
Radius (m)	Main boom length (m)						Radius (m)
	108	111	114	117	120	123	
19	172	170	168	166	165	164	19
20	163	161	159	158	156	155	20
22	147	145	143	142	141	139	22
24	132	131	130	129	128	126	24
26	118	117	116	115	115	114	26
28	107	106	105	104	103	103	28
30	97	96.3	95.1	94.4	93.9	93.1	30
32	87.9	87.6	86.5	85.8	85.3	84.6	32
34	79.5	79.2	78.4	78.1	77.8	77.1	34
36	72.1	71.8	71	70.7	70.7	70.3	36
38	65.6	65.3	64.4	64.2	64.1	63.8	38
40	59.8	59.5	58.6	58.3	58.3	57.9	40
44	49.9	49.6	48.7	48.4	48.4	48	44
48	41.9	41.6	40.7	40.3	40.3	39.9	48
52	35.2	34.9	33.9	33.6	33.5	33.1	52
56	29.5	29.1	28.2	27.9	27.8	27.4	56
60	24.6	24.2	23.3	23	22.9	22.5	60
64	20.3	20	19	18.7	18.6	18.2	64
68	16.6	16.3	15.3	14.9	14.9	14.4	68
72	13.3	12.9	12	11.6	11.5	11.1	72
76	10.3	10	9	8.7	8.6	8.1	76
80	7.7	7.3	6.3	6	5.9	5.5	80
84	5.3						84

Superlift radius: 20m Rear counterweight: 210t Central counterweight: 60t Suspended ballast: 0t							
Radius (m)	Main boom length (m)						Radius (m)
	126	129	132	135	138	141	
19	161	160					19
20	153	151	150	149			20
22	138	136	135	134	132	130	22
24	125	124	122	121	120	118	24
26	113	112	111	110	109	107	26
28	101	101	100	99.4	98.1	96.6	28
30	91.9	91.2	90.6	89.8	88.6	87.1	30
32	83.4	82.8	82.2	81.5	80.3	78.8	32
34	76	75.3	74.8	74.1	72.9	71.4	34
36	69.3	68.7	68.2	67.6	66.4	64.9	36
38	62.9	62.6	62.4	61.7	60.5	59	38
40	57	56.7	56.6	56.2	55.3	53.8	40
44	47.1	46.8	46.6	46.3	45.3	44	44
48	39	38.6	38.5	38.1	37.1	35.8	48
52	32.2	31.8	31.7	31.3	30.3	28.9	52
56	26.4	26.1	25.9	25.5	24.5	23.1	56
60	21.5	21.1	21	20.6	19.6	18.1	60
64	17.2	16.9	16.7	16.3	15.3	13.8	64
68	13.4	13.1	12.9	12.5	11.5	10	68
72	10.1	9.8	9.6	9.2	8.1	6.7	72
76	7.1	6.8	6.6	6.2	5.2		76

Superlift radius: 20m Rear counterweight: 210t Central counterweight: 60t Suspended ballast: 0t							
Radius (m)	Main boom length (m)						Radius (m)
	144	147	150	153	156	159	
22	129	128	127	122			22
24	117	116	114	113	113	110	24
26	106	105	104	103	102	101	26
28	95.9	95.1	93.9	93.1	92.6	91.8	28
30	86.5	85.7	84.5	83.8	83.4	82.6	30
32	78.2	77.5	76.3	75.6	75.3	74.5	32
34	70.9	70.2	69.1	68.4	68.1	67.3	34
36	64.4	63.7	62.6	61.9	61.7	61	36
38	58.6	57.9	56.8	56.2	55.9	55.2	38
40	53.4	52.7	51.6	50.9	50.7	50.1	40
44	43.8	43.4	42.6	41.9	41.8	41.1	44
48	35.6	35.2	34.3	33.9	34	33.6	48
52	28.8	28.4	27.4	27	27.1	26.7	52
56	23	22.5	21.6	21.2	21.3	20.9	56
60	18	17.6	16.6	16.2	16.3	15.8	60
64	13.7	13.2	12.3	11.8	11.9	11.5	64
68	9.9	9.4	8.5	8	8.1	7.7	68
72	6.5	6.1	5.1				72

3.7. Lifting performance of SLHSDB-2

Code	G66A	G66	G65	G13	G14AS	G14B	G14C	G23
Length	12	12	12	6	12	12	12	3
147	1	1	1	1	1	2	0	1
150	1	1	1	0	1	2	0	0
153	1	1	1	0	1	2	0	1
156	1	1	1	1	1	2	0	0
159	1	1	1	1	1	2	0	1
162	1	1	1	0	1	2	1	0
165	1	1	1	0	1	2	1	1
168	1	1	1	1	1	2	1	0
171	1	1	1	1	1	2	1	1

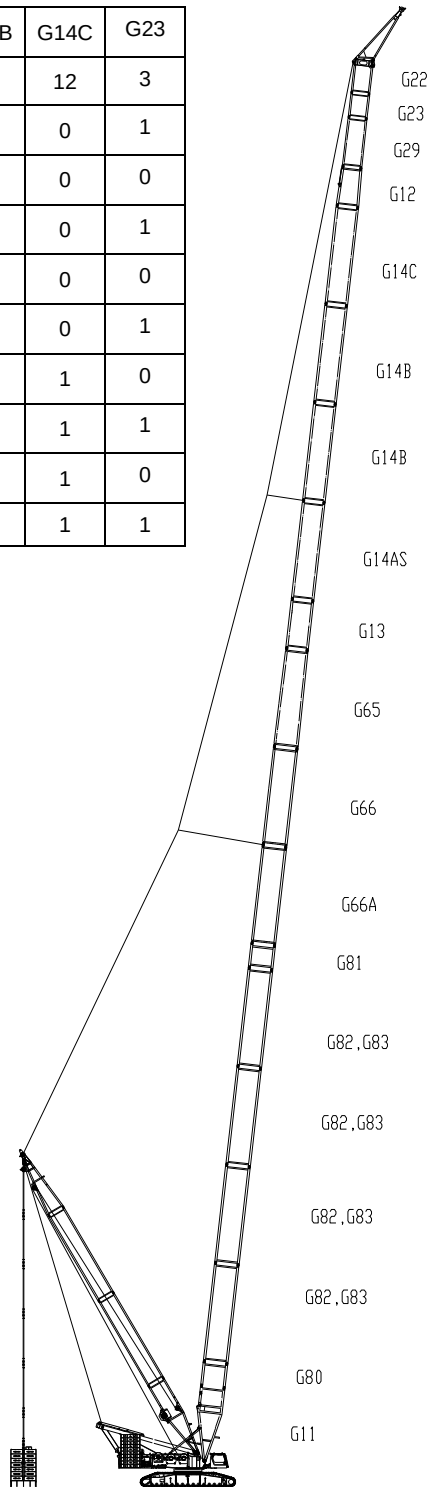

Note: Main boom pivot section (G11-9m), ultra-wide boom (54m), main boom head (G12-4.8m), luffing jib reducing section (G29-6m) and luffing jib head (G22-4.2m) are not labeled in the above table.

Figure 21 Combination of boom section of SLHSDB-2 (147m-171m+7m)

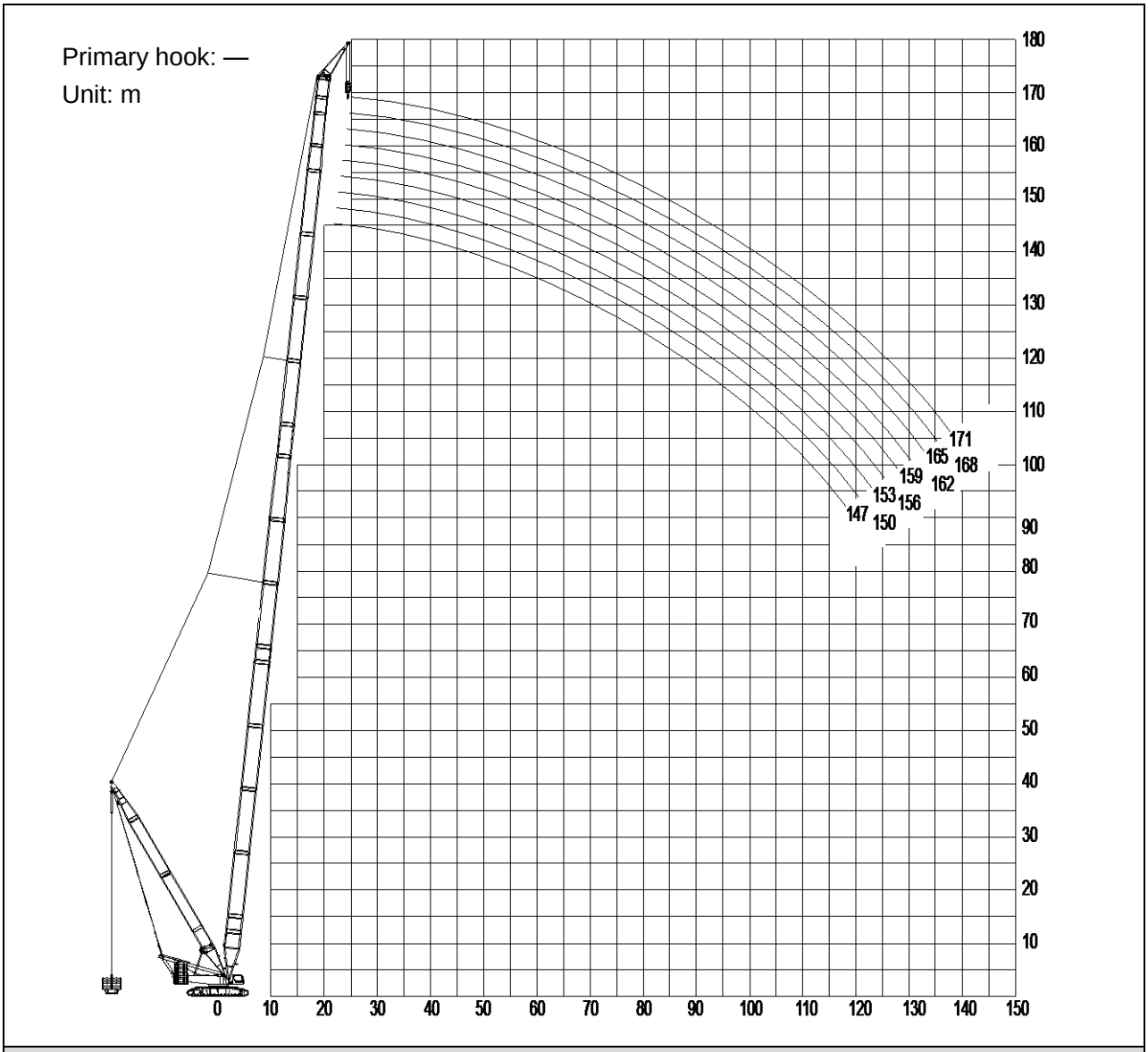

Figure 22 Hoisting height characteristic curve of SLHSDB-2 (147m-171m+7m)

Lifting capacity chart of SLHSDB-2

Rear counterweight: 190t Suspended ballast: 400t Central counterweight: 60t Superlift radius: 20m
Jib head: 7m

Radius (m)	Main boom length (m)									Radius (m)
	147	150	153	156	159	162	165	168	171	
22	180									22
24	180	171	161	157	147	138	128			24
26	180	168	158	155	144	133	124	124	112	26
28	178	164	155	151	142	129	120	119	112	28
30	175	160	150	146	137	124	115	115	108	30
32	171	155	145	140	131	121	111	110	104	32
34	166	150	140	135	126	117	108	106	98.9	34
36	161	145	136	130	122	113	104	101	95.5	36
38	156	140	131	126	117	108	101	98.1	92.1	38
40	151	135	125	121	113	104	96.8	93.4	87.9	40
44	145	130	117	113	104	96.8	90	86.6	81	44
48	140	124	109	104	98.1	90	83.1	81	75.5	48
52	132	118	102	98.9	92.1	84.5	77.6	75.5	70	52
56	121	108	98	92.1	86.6	78.9	73.4	70	64.5	56
60	108	100	92.5	87.9	81	74.7	68.7	65.3	59.8	60
64	102	93.4	86.6	82.3	75.5	70	64.5	61.1	56.4	64
68	96.8	89.2	82.3	77.6	72.1	65.8	59.8	56.9	52.2	68
72	93.4	84.5	77.6	73.4	67.9	62.4	56.9	53.5	48.8	72
76	89.2	81	74.7	70	64.5	59	53.5	50.1	45.4	76
80	84.5	77.6	71.3	66.6	61.1	55.6	50.1	46.7	43.3	80
84	82.3	74.7	67.9	63.2	57.7	52.2	47.5	44.6	39.9	84
88	77.6	72.1	65.3	61.1	55.6	50.1	45.4	42	37.8	88
92	72.1	68.7	62.4	57.7	53	47.5	42.5	39.9	35.7	92
96	66.6	66.6	59.8	55.6	50.1	45.4	40.7	37	33.6	96
100	61.1	61.1	57.7	53.5	48.8	43.3	38.6	35.7	31	100

3.8. Lifting performance of SWDB

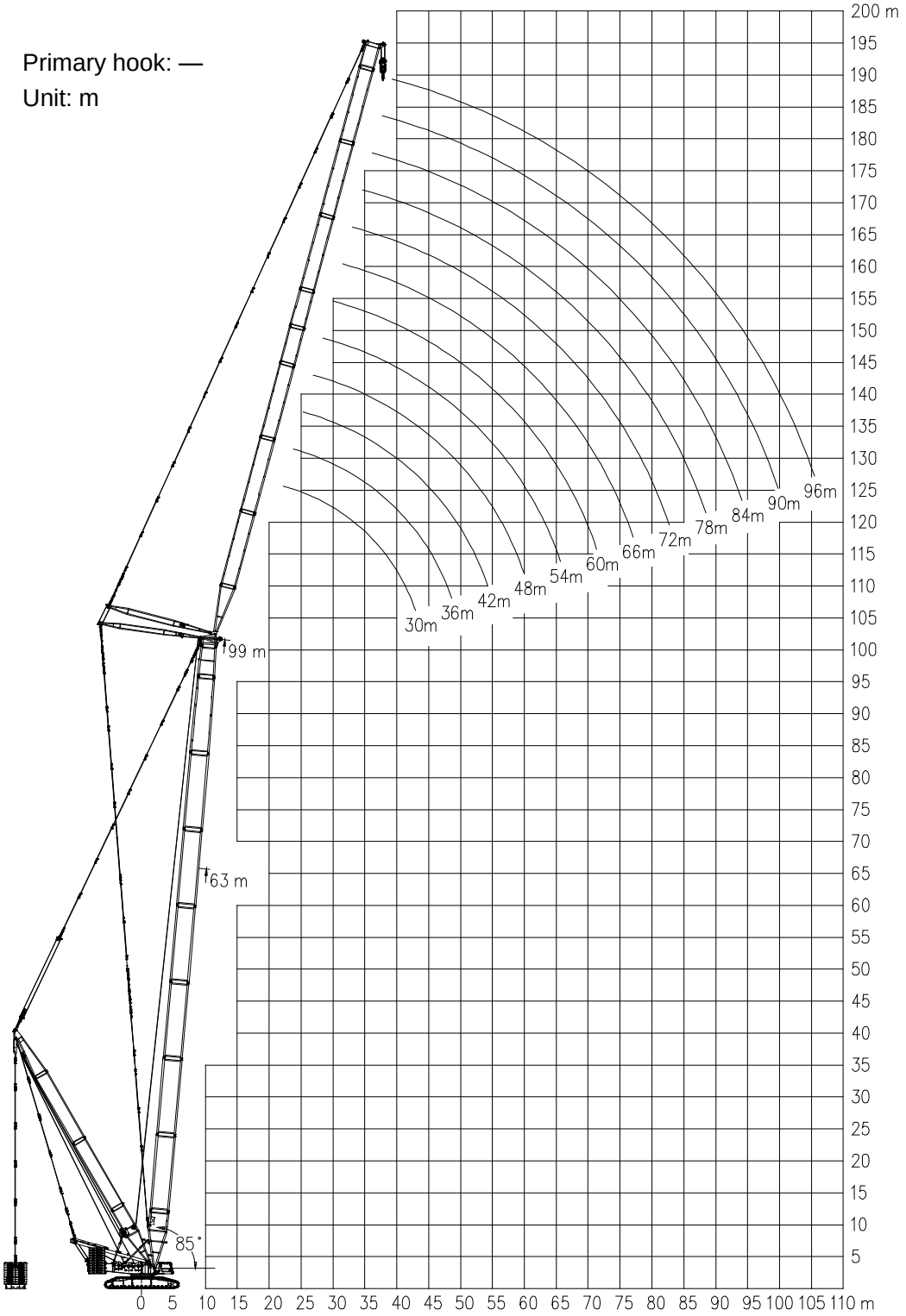

Figure 23 Hoisting height characteristic curve of SWDB

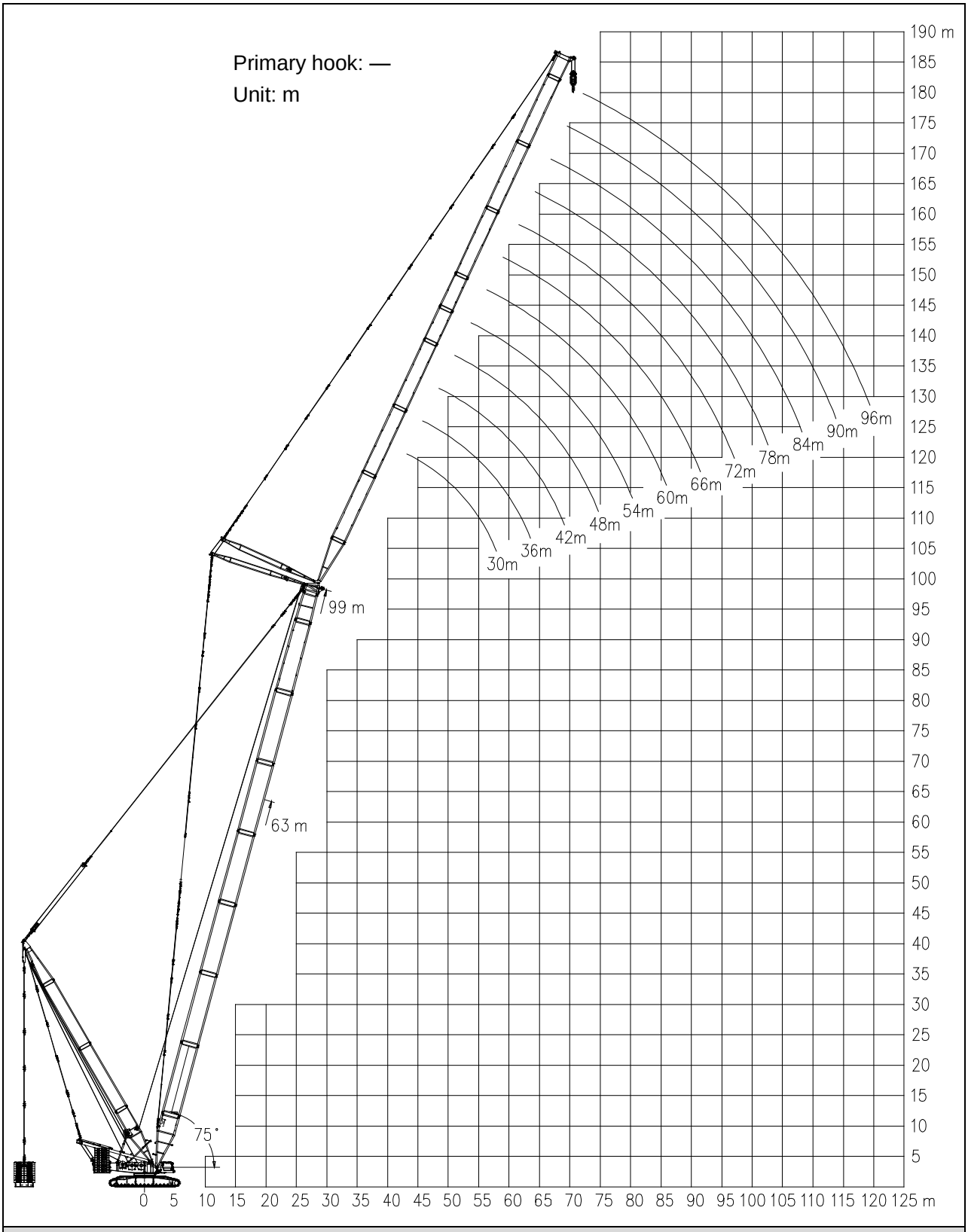

Figure 24 Hoisting height characteristic curve of SWDB

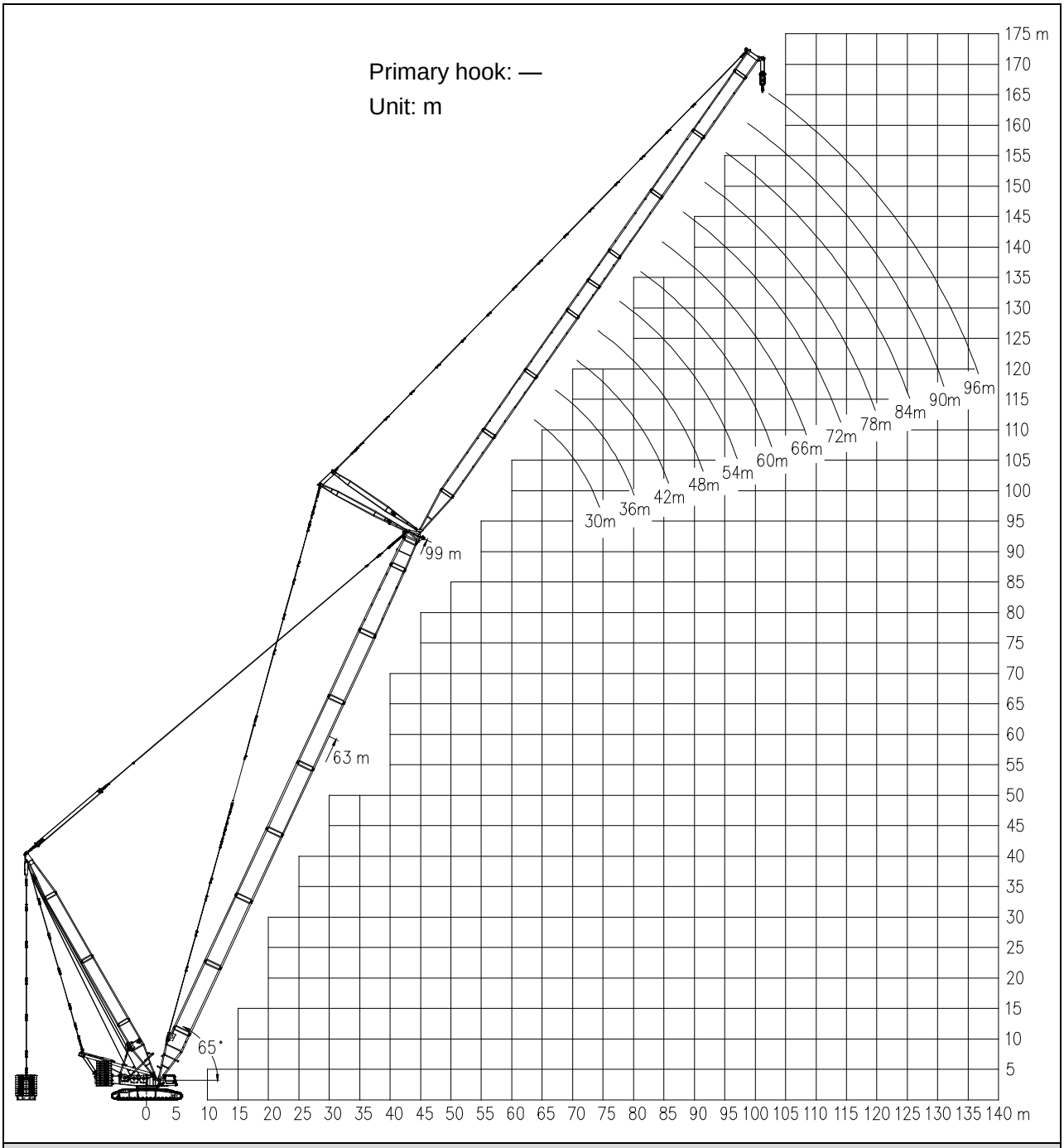

Figure 25 Hoisting height characteristic curve of SWDB

Lifting capacity charts of SWDB

Main boom length: 63m Rear counterweight: 210t Central counterweight: 60t Suspended ballast: 300t Superlift radius: 20m Main boom angle: 85°

Radius (m)	Jib length (m)												Radius (m)
	30	36	42	48	54	60	66	72	78	84	90	96	
18	325												18
20	325	294											20
22	325	294	262										22
24	290	291	262	224	187								24
26	258	258	258	224	187	159							26
28	232	232	232	224	187	159	136						28
30	211	211	210	209	187	159	136	116					30
32	193	193	193	191	186	158	135	115	98	84.5			32
34	178	178	178	176	175	156	133	114	97.9	84.3	67.7		34
36	160	165	165	163	162	155	132	113	97.7	84	67.7	61.7	36
38		154	153	152	151	149	131	112	97.4	83.7	67.7	61.3	38
40		143	144	142	141	140	129	111	97.2	83.3	67.7	60.8	40
44			127	126	125	123	122	109	96.6	82.5	67.7	60	44
48			106	113	112	110	109	107	95.9	81.7	67.7	59	48
52				98.3	101	99.6	98.2	96.6	94.6	80.8	67.2	58	52
56					90.2	90.6	89.2	87.7	86.6	79.5	66.4	57.1	56
60						82.2	81.7	80.1	79	77.4	65.5	55.9	60
64						72	75.1	73.6	72.5	70.9	64.7	54.2	64
68							66.8	68	66.9	65.3	62.4	52.4	68
72								61.3	61.9	60.4	57.5	48.2	72
76								54.3	56.6	56.1	53.2	44.4	76
80									50.7	51.8	49.2	40.7	80
84										46.7	45.5	37.5	84
88										41.5	42.2	34.3	88
92											38.4	31.5	92
96												28.8	96
100												26.6	100

Main boom length: 75m Rear counterweight: 210t Central counterweight: 60t Suspended ballast: 300t Superlift radius: 20m Main boom angle: 85°													
Radius (m)	Jib length (m)												Radius (m)
	30	36	42	48	54	60	66	72	78	84	90	96	
20	325												20
22	314	280	237										22
24	300	272	237	202									24
26	274	261	237	202	172								26
28	245	245	228	201	171	146							28
30	221	222	218	199	169	145	124	106					30
32	202	202	202	192	168	143	123	105	90.8				32
34	186	186	185	184	166	142	122	104	89.9	77.8			34
36	171	172	171	170	164	141	121	103	89	77.7	66.7	57.4	36
38		160	159	158	157	139	119	102	88.1	77.6	66.5	57.1	38
40		149	149	147	146	138	118	101	87.2	77.4	66.3	56.9	40
44			131	130	129	127	117	99.9	86.3	76.9	65.7	56.3	44
48			113	116	115	113	112	98.9	85.4	76.3	65.1	55.6	48
52				103	104	102	101	97.9	84.6	75.7	64.4	54.8	52
56					94	92.8	91.4	89.9	83.7	75.1	63.6	54.1	56
60					81.4	84.9	83.5	82	80.8	74.5	62.9	53.3	60
64						75.2	76.8	75.2	74.1	72.5	62.2	52.5	64
68							69.3	69.4	68.2	66.7	61.5	51.6	68
72							60.9	63.5	63.2	61.6	58.8	49.3	72
76								56.6	58.5	57.2	54.3	45.3	76
80									52.6	53.2	50.2	41.7	80
84									46.5	48.3	46.4	38.3	84
88										43.3	43	35.1	88
92											39.9	32.2	92
96												29.5	96
100												27.2	100

Main boom length: 87m Rear counterweight: 210t Central counterweight: 60t Suspended ballast: 300t Superlift radius: 20m Main boom angle: 85°													
Radius (m)	Jib length (m)												Radius (m)
	30	36	42	48	54	60	66	72	78	84	90	96	
20	269												20
22	260	235											22
24	247	227	205										24
26	236	218	201	175	149								26
28	226	210	194	173	147	128							28
30	213	200	186	172	146	126	110						30
32	200	189	178	166	144	125	109	94.7					32
34	188	179	169	159	143	124	107	93.8	81.7	70.3			34
36	175	169	161	152	141	123	106	92.9	80.9	69.6	60.7		36
38	162	158	152	145	137	121	105	91.9	80	68.9	60.7	52.4	38
40		149	143	138	131	118	104	91	79.2	68.2	60.7	52.3	40
44		131	131	124	120	114	103	90.1	78.5	67.6	60.4	51.9	44
48			117	114	108	104	99.7	89.2	77.7	66.9	60	51.5	48
52				102	100	96.6	92.2	87.9	76.9	66.2	59.6	51	52
56				91.5	90.4	88.7	84.9	81.6	76.1	65.6	59.1	50.5	56
60					81.5	80.6	79.1	75.6	71.8	64.9	58.6	49.9	60
64						73.1	72.3	69.9	67.6	64.2	58.1	49.3	64
68							66	65.3	62.9	60.8	57.3	48.8	68
72							60.3	60	58.4	56.9	54	48.3	72
76								55.1	54.3	53.1	50.7	46.4	76
80									50.5	49.6	47.7	42.6	80
84									47.1	45.9	44.8	39	84
88										43	42.1	35.8	88
92											39.6	32.9	92
96											36.8	30.2	96
100												27.7	100

Main boom length: 99m Rear counterweight: 210t Central counterweight: 60t Suspended ballast: 300t Superlift radius: 20m Main boom angle: 85°													
Radius (m)	Jib length (m)												Radius (m)
	30	36	42	48	54	60	66	72	78	84	90	96	
22	213												22
24	205	188	165										24
26	195	181	163	143									26
28	186	173	161	141	124								28
30	176	166	155	140	122	107							30
32	169	157	149	138	121	106	93.5	81					32
34	159	149	138	135	120	105	92.5	80.2	70.5				34
36	150	143	132	129	119	104	91.6	79.3	69.8	61.4			36
38	140	135	127	123	116	103	90.7	78.6	69.1	60.8	54.5	47.5	38
40		128	123	114	106	102	89.8	77.8	68.4	60.2	54	47	40
44		113	109	106	100	95.6	88.9	77	67.7	59.6	53.5	46.5	44
48			101	95.5	93.3	89.7	83.2	76.2	67.1	59	52.9	46.1	48
52				88.6	84	82.2	79.1	73	66.4	58.4	52.4	45.6	52
56				79.6	78.3	74.5	72.9	70.3	64.4	57.8	51.9	45.1	56
60					70.8	69.8	67.1	65.1	60.2	56.8	51.3	44.7	60
64						63.5	62.1	60.2	57.6	53.6	50.8	44.2	64
68						57.7	57.3	55.6	54.2	52.6	48.4	43.8	68
72							52.4	52	50.4	49.1	45.5	43.4	72
76								47.8	46.8	45.2	44.2	42	76
80								43.9	43.6	42.2	41.7	39.7	80
84									40.7	39.5	39.1	37.4	84
88										37.9	36.7	35.2	88
92										35.7	34.5	33.2	92
96											32.4	30.9	96
100												28.4	100

Main boom length: 63m Rear counterweight: 210t Central counterweight: 60t Suspended ballast: 300t Superlift radius: 20m Main boom angle: 75°													
Radius (m)	Jib length (m)												Radius (m)
	30	36	42	48	54	60	66	72	78	84	90	96	
34	276												34
36	258	257											36
38	242	241											38
40	220	220	220										40
44	185	185	184	183	175								44
48		159	158	157	156	147							48
52		140	139	137	136	135	124	104					52
56			123	122	121	119	118	103	87.9				56
60				110	109	107	106	102	87	74.1	62.2		60
64				99.3	98.5	97	95.6	94	86.2	73.4	61.5	52.4	64
68					90.1	88.4	87.1	85.5	84.4	72.6	60.9	52.3	68
72						81.2	79.8	78.2	77.1	71.9	60.3	52	72
76						73.5	73.6	72	70.9	69.3	59.7	51.7	76
80							68.2	66.6	65.4	63.9	59.1	51.3	80
84								61.9	60.7	59.2	56.4	47.1	84
88								55.9	56.5	55	52.1	43.3	88
92									52.2	51.3	48.2	39.7	92
96										48	44.6	36.5	96
100											41.2	33.6	100
104											38.3	30.8	104
108												28.3	108

Main boom length: 75m Rear counterweight: 210t Central counterweight: 60t Suspended ballast: 300t Superlift radius: 20m Main boom angle: 75°													
Radius (m)	Jib length (m)												Radius (m)
	30	36	42	48	54	60	66	72	78	84	90	96	
38	240												38
40	226	225											40
44	202	201	200										44
48	178	178	178	176	164								48
52		154	153	152	151	139	113						52
56		136	135	134	133	131	112	96.1					56
60			120	119	118	116	110	95.1	81.5	67.9			60
64				107	106	105	103	94.2	80.7	67.2	57.7		64
68				96.3	96.5	94.9	93.6	92	79.9	66.5	57.2	48.8	68
72					88.4	86.7	85.3	83.8	79.1	65.9	56.6	48.3	72
76						79.7	78.3	76.8	75.6	65.2	56	47.9	76
80							72.3	70.7	69.6	64.6	55.5	47.4	80
84							66.8	65.5	64.3	62.8	54.9	46.9	84
88								60.9	59.7	58.2	54.4	46.2	88
92									55.7	54.2	51.1	42.5	92
96									51.2	50.6	47.3	39	96
100										47.3	43.7	35.8	100
104											40.5	32.9	104
108											37.8	30.2	108
112												27.7	112

Main boom length: 87m Rear counterweight: 210t Central counterweight: 60t Suspended ballast: 300t Superlift radius: 20m Main boom angle: 75°													
Radius (m)	Jib length (m)												Radius (m)
	30	36	42	48	54	60	66	72	78	84	90	96	
40	222												40
44	199	197											44
48	180	178	177	174									48
52	164	162	161	160	148								52
56		149	148	147	146	126	102						56
60			131	130	129	125	101	88	72.8				60
64			118	116	115	114	100	87.1	72.1	62.5			64
68				105	104	102	99.7	86.2	71.3	61.9	53.4	45.7	68
72					94.6	93	91.6	85.4	70.6	61.2	52.9	45.2	72
76					86.7	85	83.7	82.1	69.9	60.6	52.3	44.8	76
80						78.3	76.9	75.3	69.2	60	51.8	44.3	80
84							71.1	69.5	68.4	59.4	51.3	43.9	84
88							65.2	64.4	63.3	58.8	50.8	43.4	88
92								60	58.8	57.3	50.3	43	92
96									54.8	53.3	49.8	41.7	96
100									50.1	49.8	46.4	38.3	100
104										46.4	43	35.2	104
108											40	32.2	108
112												29.5	112
116												27.3	116

Main boom length: 99m Rear counterweight: 210t Central counterweight: 60t Suspended ballast: 300t Superlift radius: 20m Main boom angle: 75°													
Radius (m)	Jib length (m)												Radius (m)
	30	36	42	48	54	60	66	72	78	84	90	96	
44	194												44
48	175	174	170										48
52	160	158	157	147									52
56	147	145	144	143	127	103							56
60		134	133	132	125	102	89.8						60
64			123	122	121	101	88.9	77.7	64.4				64
68			115	113	112	100	88	76.9	63.7	55.8			68
72				103	101	99.4	87.1	76.2	63.1	55.2	49	41.2	72
76					92.7	91.1	86.2	75.4	62.5	54.6	48.5	40.8	76
80					84.1	83.4	82.1	74.6	61.8	54.1	48	40.4	80
84						77	75.5	73.9	61.2	53.6	47.5	40	84
88							69.9	68.3	60.6	53	47.1	39.6	88
92								63.4	60	52.5	46.6	39.2	92
96								59	57.9	52	46.1	38.8	96
100									54	51.4	45.7	38.4	100
104										49.1	45.2	37.6	104
108										45.5	42.3	34.5	108
112											39.3	31.6	112
116												29.1	116
120												26.8	120

Main boom length: 63m Rear counterweight: 210t Central counterweight: 60t Suspended ballast: 300t Superlift radius: 20m Main boom angle: 65°													
Radius (m)	Jib length (m)												Radius (m)
	30	36	42	48	54	60	66	72	78	84	90	96	
52	160	159											52
56	147	146	145										56
60		135	134	132									60
64			124	123	121								64
68			115	114	113	112							68
72				105	104	103	101						72
76					94.9	93.3	92	90.4	75.7				76
80					87.1	85.4	84	82.4	74.9	63.6			80
84						78.6	77.2	75.6	74.2	62.9	53.3		84
88							71.3	69.7	68.6	62.3	52.8	45.5	88
92							66.3	64.6	63.5	61.7	52.2	45.1	92
96								60.2	59	57.5	51.7	44.6	96
100									55	53.5	50.4	41.9	100
104									51.5	49.9	46.7	38.5	104
108										46.8	43.2	35.2	108
112											40.1	32.5	112
116											37.2	29.8	116
120												27.3	120

Main boom length: 75m Rear counterweight: 210t Central counterweight: 60t Suspended ballast: 300t Superlift radius: 20m Main boom angle: 65°													
Radius (m)	Jib length (m)												Radius (m)
	30	36	42	48	54	60	66	72	78	84	90	96	
56	144												56
60	133	132											60
64		122	121	120									64
68		114	113	111	110								68
72			105	104	103	102							72
76				97.9	96.9	95.5	94.3						76
80				92	91.1	89.8	88.6	85.5					80
84					85.9	84.6	83.4	81.9	71.6				84
88						79.8	78.8	77.3	70.8	59.9	48.7		88
92						74.3	72.8	71.2	70.1	59.3	48.2	41.9	92
96							67.6	65.9	64.8	58.7	47.7	41.5	96
100								61.3	60.1	58.2	47.3	41	100
104									56	54.5	46.8	40.6	104
108									52.4	50.9	46.3	39.3	108
112										47.6	44.2	36.1	112
116											40.8	33.1	116
120											38	30.5	120
124												28	124

Main boom length: 87m Rear counterweight: 210t Central counterweight: 60t Suspended ballast: 300t Superlift radius: 20m Main boom angle: 65°													
Radius (m)	Jib length (m)												Radius (m)
	30	36	42	48	54	60	66	72	78	84	90	96	
60	128												60
64	119	118											64
68	111	110	108										68
72		102	101	100									72
76			95.2	93.8	92.7	91.2							76
80				88.2	87.2	85.7	84.5						80
84				83.2	82.2	80.8	79.5	76.9					84
88					77.6	76.3	75.1	73.5	64.8				88
92						72.1	71	69.5	64.2	54.7			92
96						68.3	67.3	65.8	63.5	54.1	46		96
100							63.8	62.4	61.5	53.6	45.6	39.5	100
104								59.2	58.4	53	45.1	39.1	104
108								56.3	55.5	52.5	44.7	38.8	108
112									52.8	51.5	44.2	38.4	112
116										48.4	43.8	36.9	116
120										45.5	41.7	33.8	120
124											38.7	31.1	124
128												28.6	128

Main boom length: 99m Rear counterweight: 210t Central counterweight: 60t Suspended ballast: 300t Superlift radius: 20m Main boom angle: 65°													
Radius (m)	Jib length (m)												Radius m
	30	36	42	48	54	60	66	72	78	84	90	96	
64	113												64
68	106	104											68
72	99.1	97.7	96.4										72
76		91.6	90.4	88.9									76
80			85	83.6	82.4								80
84			80.2	78.8	77.7	76.2							84
88				74.4	73.4	71.9	70.6	65.9					88
92					69.4	68	66.8	65.2	56.2				92
96					65.8	64.4	63.2	61.7	55.6	47.8			96
100						61.1	60	58.4	55.1	47.4	41.6		100
104							57	55.5	54.5	46.9	41.2	35.4	104
108							54.2	52.7	51.8	46.4	40.7	35	108
112								50.1	49.2	46	40.3	34.7	112
116									46.7	45.1	39.9	34.3	116
120										42.8	39.5	34	120
124										40.6	39.1	33.6	124
128											37.4	31.8	128
132												29.3	132
136												26.9	136

3.9. Lifting performance of SFvDB

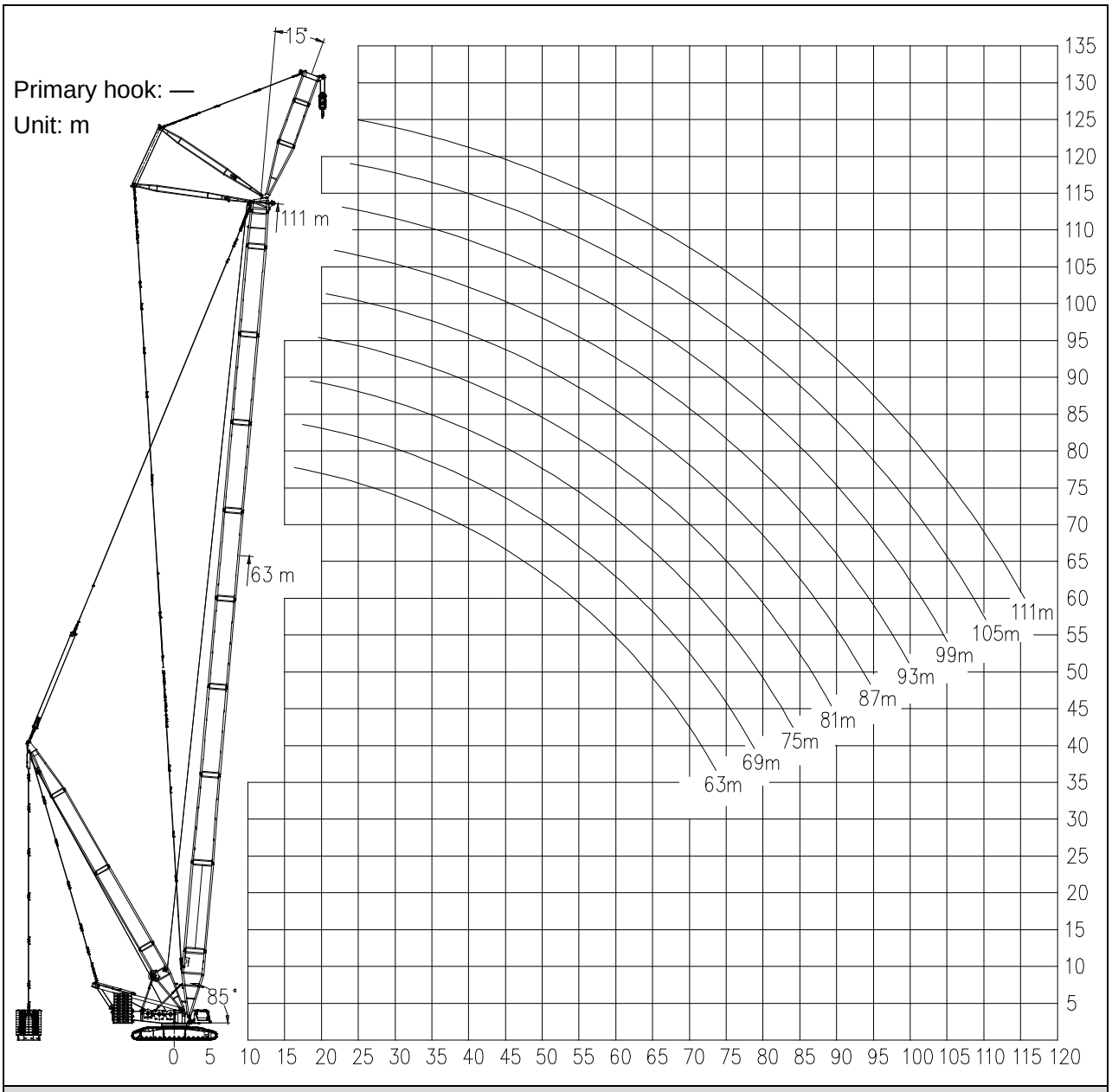

Figure 26 Hoisting height characteristic curve of SFvDB

Lifting capacity chart of SFvDB

Jib length: 18m Rear counterweight: 210t Central counterweight: 60t Suspended ballast: 300t
Superlift radius: 20m Included angle between main boom and jib: 15°

Radius (m)	Main boom length (m)									Radius (m)
	63	69	75	81	87	93	99	105	111	
19	360									19
20	360	360								20
22	360	360	360	355	318					22
24	360	360	360	352	314	278	247	220		24
26	352	352	352	348	312	276	245	218	191	26
28	326	325	325	324	307	273	242	216	189	28
30	302	301	302	300	300	270	240	213	187	30
32	282	281	281	280	280	265	236	211	185	32
34	264	262	263	262	261	260	234	208	183	34
36	248	246	247	246	245	243	230	205	181	36
38	233	232	233	231	230	229	227	203	179	38
40	219	219	219	219	217	216	214	200	176	40
44	197	196	197	195	194	193	191	187	171	44
48	177	175	177	175	174	173	171	169	165	48
52	159	158	159	158	157	153	153	153	150	52
56	143	143	143	143	142	141	137	137	137	56
60	129	129	129	129	129	127	124	124	123	60
64	119	118	119	116	116	114	114	111	111	64
68	107	107	107	107	105	105	103	101	101	68
72	101	98	101	98	98	95	95	93	91	72
76		89	93	89	89	87	85	85	85	76
80			85	84	82	80	80	77	77	80
84			79	77	75	73	71	71	70	84
88				71	70	68	67	66	64	88
92					64	64	61	59	59	92
96						59	55	54	54	96
100						52	52	50	49	100

3.10. Lifting performance of SW

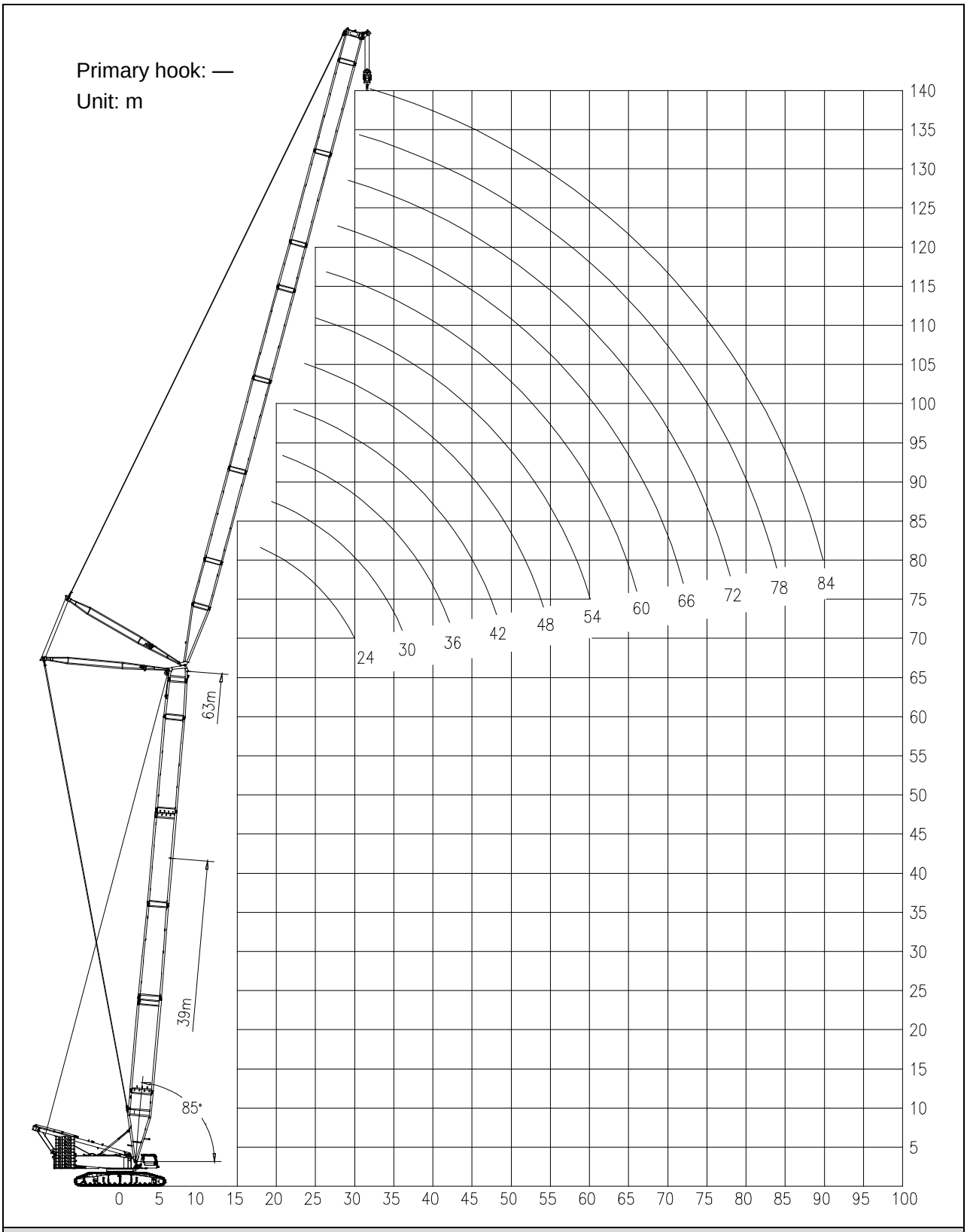

Figure 27 Hoisting height characteristic curve of SW

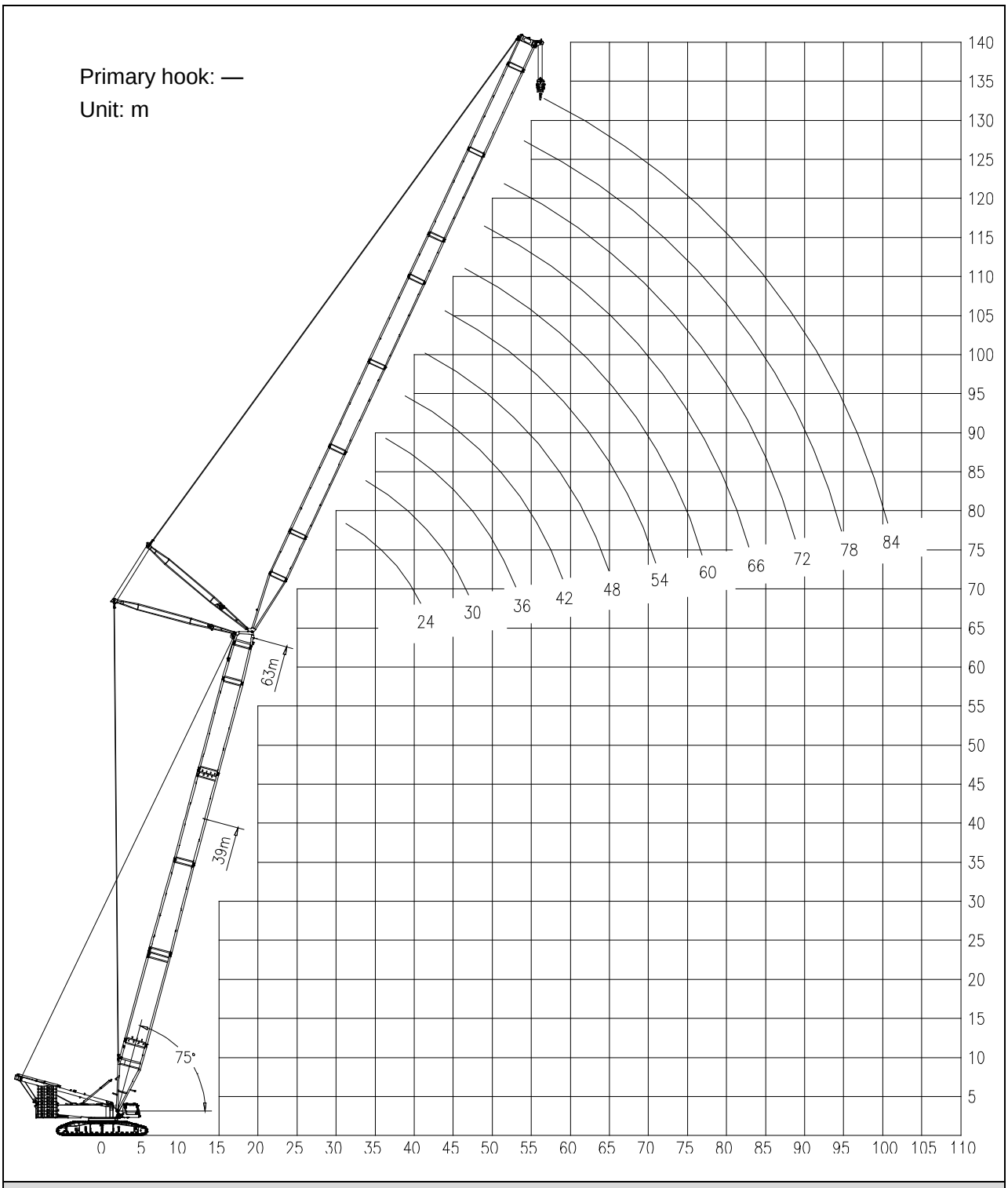

Figure 28 Hoisting height characteristic curve of SW

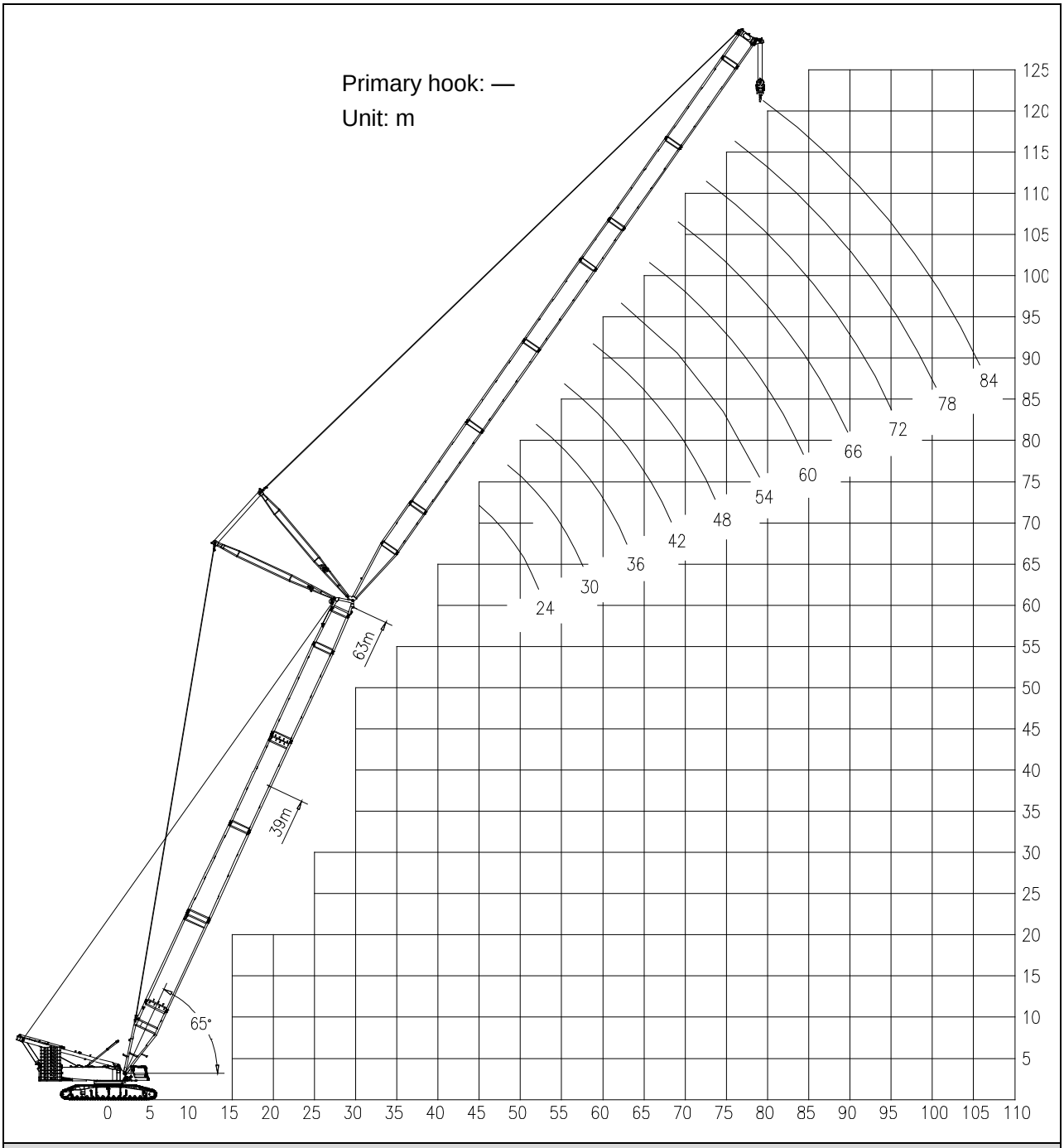

Figure 29 Hoisting height characteristic curve of SW

Lifting capacity charts of SW

Main boom length: 39m Rear counterweight: 210t Central counterweight: 60t Main boom angle: 85°												
Radius (m)	Jib length (m)											Radius (m)
	24	30	36	42	48	54	60	66	72	78	84	
16	221	214										16
18	196	190	184									18
20	176	171	166	161								20
22	155	155	151	146	142	138						22
24	138	138	137	134	130	127	123					24
26	124	124	124	123	120	117	113	110				26
28	113	113	112	112	111	108	105	102	99.3	96.8		28
30		103	103	102	101	100	98.1	95.5	92.3	90.1	87.3	30
32		95.3	94.7	94	93	92.4	91.3	89.1	86.2	84.1	81.3	32
34		88.1	87.5	86.9	85.9	85.3	84.2	83.4	80.7	78.7	76.1	34
36			81.3	80.6	79.7	79	78	77.2	75.8	73.8	71.4	36
38			75.7	75.1	74.2	73.6	72.5	71.7	70.6	69.5	67	38
40			70.7	70.2	69.3	68.7	67.7	66.8	65.7	65.1	63.2	40
44				61.9	61	60.4	59.4	58.6	57.5	56.8	55.7	44
48					54.2	53.7	52.7	51.8	50.7	50.1	49	48
52					48.4	48	47	46.2	45.1	44.5	43.4	52
56						43.1	42.2	41.4	40.3	39.7	38.6	56
60							38.1	37.3	36.2	35.6	34.5	60
64							34.4	33.7	32.7	32.1	31	64
68								30.5	29.5	28.9	27.8	68
72									26.7	26.2	25.1	72
76									24.2	23.7	22.6	76
80										21.4	20.4	80
84											18.4	84

Main boom length: 45m Rear counterweight: 210t Central counterweight: 60t Main boom angle: 85°												
Radius (m)	Jib length (m)											Radius (m)
	24	30	36	42	48	54	60	66	72	78	84	
16	213											16
18	189	184	178									18
20	170	166	161	156								20
22	155	151	146	142	138							22
24	138	138	134	130	126	123	119					24
26	124	124	123	120	117	114	110	107				26
28	113	113	112	111	108	105	102	99.5	96.5			28
30	103	103	102	102	101	98.5	95.5	92.6	89.8	87.4		30
32		95.1	94.4	93.7	92.7	92	89.1	86.7	83.8	81.6	79	32
34		87.9	87.3	86.6	85.6	84.9	83.6	81.1	78.5	76.4	73.9	34
36		81.5	81.1	80.4	79.4	78.8	77.7	76.2	73.6	71.8	69.3	36
38			75.5	74.9	74	73.3	72.2	71.4	69.3	67.5	65	38
40			70.6	70	69.1	68.5	67.4	66.5	65.4	63.6	61.3	40
44				61.7	60.8	60.2	59.2	58.3	57.2	56.5	54.6	44
48					54	53.5	52.4	51.6	50.5	49.8	48.7	48
52					48.3	47.8	46.8	45.9	44.9	44.2	43.1	52
56						43	42	41.2	40.1	39.5	38.4	56
60							37.9	37.1	36	35.4	34.3	60
64							34.2	33.5	32.5	31.9	30.8	64
68								30.3	29.4	28.8	27.7	68
72									26.6	26	24.9	72
76									24	23.5	22.5	76
80										21.3	20.3	80
84											18.2	84
88											16.3	88

Main boom length: 51m Rear counterweight: 210t Central counterweight: 60t Main boom angle: 85°												
Radius (m)	Jib length (m)											Radius (m)
	24	30	36	42	48	54	60	66	72	78	84	
16	205											16
18	183	178										18
20	165	161	156	151								20
22	150	146	142	138	134							22
24	138	134	130	127	123	119						24
26	124	124	120	117	113	110	107	104				26
28	112	112	112	108	105	102	99.5	96.6	93.6			28
30	103	103	102	101	98.3	95.7	92.6	90.1	87.1	84.8		30
32		94.8	94.1	93.3	92	89.6	86.7	84.2	81.3	79.2	76.6	32
34		87.7	87	86.3	85.2	84.1	81.3	78.9	76.2	74.2	71.7	34
36		81.3	80.8	80.1	79.1	78.4	76.5	74.1	71.6	69.7	67.2	36
38			75.3	74.6	73.6	73	71.9	69.9	67.3	65.5	63.2	38
40			70.4	69.8	68.8	68.1	67.1	66	63.5	61.8	59.5	40
44				61.5	60.6	59.9	58.9	58	56.9	55.3	53	44
48				54.5	53.8	53.2	52.2	51.3	50.2	49.5	47.5	48
52					48.1	47.6	46.6	45.7	44.6	43.9	42.8	52
56						42.8	41.8	41	39.9	39.2	38.1	56
60							37.7	36.9	35.8	35.2	34	60
64							34.1	33.3	32.3	31.6	30.5	64
68								30.2	29.2	28.5	27.4	68
72									26.4	25.8	24.7	72
76									23.9	23.3	22.3	76
80										21.1	20.1	80
84											18.1	84
88											16.2	88

Main boom length: 57m Rear counterweight: 210t Central counterweight: 60t Main boom angle: 85°												
Radius (m)	Jib length (m)											Radius (m)
	24	30	36	42	48	54	60	66	72	78	84	
16	198											16
18	177	172										18
20	160	155	150									20
22	146	142	137	133	129							22
24	134	130	126	123	119	116						24
26	123	120	117	113	110	107	103					26
28	112	112	108	105	102	99.5	96.3	93.6				28
30	102	102	101	98.5	95.5	92.8	89.9	87.3	84.2	82.1		30
32		94.5	93.7	92.3	89.4	86.8	84.1	81.6	78.7	76.7	73.9	32
34		87.3	86.6	85.8	83.9	81.6	78.9	76.5	73.8	71.8	69.2	34
36		81	80.4	79.7	78.7	76.9	74.2	71.9	69.3	67.4	64.9	36
38			75	74.3	73.3	72.5	70	67.8	65.3	63.5	61	38
40			70.1	69.4	68.4	67.8	66.2	64	61.6	59.8	57.5	40
44				61.2	60.2	59.6	58.5	57.5	55.1	53.5	51.3	44
48				54.3	53.5	52.9	51.8	50.9	49.6	48	46	48
52					47.8	47.3	46.3	45.4	44.3	43.4	41.4	52
56						42.5	41.5	40.7	39.6	38.9	37.4	56
60						38.3	37.5	36.6	35.5	34.9	33.7	60
64							33.9	33.1	32	31.4	30.2	64
68								29.9	28.9	28.3	27.2	68
72								27.1	26.2	25.6	24.5	72
76									23.7	23.1	22	76
80										20.9	19.9	80
84											17.9	84
88											16	88

Main boom length: 63m Rear counterweight: 210t Central counterweight: 60t Main boom angle: 85°												
Radius (m)	Jib length (m)											Radius (m)
	24	30	36	42	48	54	60	66	72	78	84	
18	171	166										18
20	155	150	145									20
22	141	137	133	129								22
24	130	126	122	119	115	112						24
26	120	117	113	110	107	104	100					26
28	112	109	105	102	99.3	96.6	93.6	90.6				28
30	102	102	98.7	95.9	92.6	90.2	87.1	84.6	81.6			30
32		94.1	92.5	89.8	86.8	84.4	81.6	79.2	76.2	74.2	71.5	32
34		87	86.2	84.4	81.6	79.3	76.6	74.2	71.5	69.5	67	34
36		80.7	80.1	79.3	76.9	74.7	72.1	69.8	67.2	65.3	62.9	36
38			74.6	73.9	72.6	70.5	68	65.8	63.3	61.5	59.1	38
40			69.8	69.1	68.1	66.7	64.3	62.2	59.7	58	55.7	40
44				60.9	59.9	59.2	57.8	55.8	53.5	51.9	49.6	44
48				54.1	53.2	52.6	51.5	50.3	48.2	46.6	44.5	48
52					47.6	47	46	45.1	43.5	42.1	40	52
56						42.3	41.3	40.4	39.3	38.1	36.1	56
60						38.1	37.2	36.4	35.3	34.6	32.8	60
64							33.6	32.8	31.8	31.1	29.7	64
68								29.7	28.7	28.1	26.9	68
72								26.9	26	25.3	24.2	72
76									23.5	22.9	21.8	76
80										20.7	19.6	80
84										18.7	17.7	84
88											15.8	88

Main boom length: 39m Rear counterweight: 210t Central counterweight: 60t Main boom angle: 75°												
Radius (m)	Jib length (m)											Radius (m)
	24	30	36	42	48	54	60	66	72	78	84	
26	115											26
28	104	104										28
30	95.7	95.2	93.9									30
32	88.1	87.6	86.4									32
34	81.4	81	79.9	78.9								34
36	75.4	75.3	74.2	73.2	71.9							36
38		70.2	69.1	68.2	66.9	66						38
40		65.6	64.7	63.7	62.5	61.6	60.3					40
44			57	56.1	54.9	54.1	52.8	51.8				44
48			50.5	49.9	48.8	47.9	46.7	45.7	44.3	43.5		48
52				44.6	43.6	42.8	41.6	40.6	39.3	38.5	37.2	52
56					39.1	38.4	37.3	36.3	35	34.2	32.9	56
60						34.6	33.5	32.5	31.3	30.5	29.3	60
64						31.3	30.3	29.3	28.1	27.3	26.1	64
68							27.4	26.5	25.3	24.5	23.3	68
72								23.9	22.8	22.1	20.8	72
76								21.6	20.5	19.8	18.6	76
80									18.5	17.8	16.6	80
84										16	14.9	84
88										14.3	13.2	88
92											11.7	92

Main boom length: 45m Rear counterweight: 210t Central counterweight: 60t Main boom angle: 75°												
Radius (m)	Jib length (m)											Radius (m)
	24	30	36	42	48	54	60	66	72	78	84	
28	102											28
30	93.7	93										30
32	86.3	85.6	84.4									32
34	79.8	79.2	78	76.9								34
36	74	73.6	72.4	71.3								36
38	68.8	68.6	67.5	66.4	65.1							38
40		64.2	63.1	62.1	60.8	59.9						40
44		56.4	55.6	54.7	53.4	52.5	51.2	50.1				44
48			49.4	48.6	47.4	46.5	45.3	44.2	42.8			48
52				43.4	42.3	41.5	40.3	39.2	37.8	37	35.7	52
56					38	37.3	36	35	33.7	32.9	31.6	56
60					34.2	33.6	32.4	31.4	30.1	29.3	28	60
64						30.3	29.2	28.2	27	26.2	24.9	64
68							26.4	25.5	24.2	23.5	22.2	68
72							23.9	23	21.8	21.1	19.8	72
76								20.8	19.6	18.9	17.7	76
80									17.6	17	15.7	80
84									15.8	15.2	14	84
88										13.5	12.4	88
92											10.9	92
96											9.5	96

Main boom length: 51m Rear counterweight: 210t Central counterweight: 60t Main boom angle: 75°												
Radius (m)	Jib length (m)											Radius (m)
	24	30	36	42	48	54	60	66	72	78	84	
28	100											28
30	91.6											30
32	84.3	83.6										32
34	78	77.3	76									34
36	72.4	71.8	70.5	69.4								36
38	67.4	67	65.7	64.6	63.3							38
40		62.6	61.5	60.4	59							40
44		55.2	54.2	53.2	51.9	50.9	49.5					44
48			48.1	47.2	46	45.1	43.7	42.6				48
52				42.2	41.1	40.2	38.9	37.8	36.4	35.5		52
56				37.9	36.9	36	34.8	33.7	32.3	31.5	30.1	56
60					33.2	32.5	31.2	30.2	28.8	28	26.7	60
64						29.3	28.1	27.1	25.8	25	23.7	64
68						26.5	25.4	24.4	23.1	22.3	21	68
72							23	22	20.8	20	18.7	72
76								19.9	18.6	17.9	16.6	76
80								17.9	16.7	16	14.8	80
84									15	14.3	13.1	84
88										12.7	11.5	88
92											10.1	92
96											8.8	96

Main boom length: 57m Rear counterweight: 210t Central counterweight: 60t Main boom angle: 75°												
Radius (m)	Jib length (m)											Radius (m)
	24	30	36	42	48	54	60	66	72	78	84	
30	89.1											30
32	82	81.1										32
34	75.8	75										34
36	70.4	69.7	68.4									36
38	65.6	65	63.7	62.5								38
40	61.3	60.8	59.5	58.4	57							40
44		53.6	52.5	51.4	50	49						44
48			46.6	45.6	44.3	43.4	42	40.8				48
52			41.6	40.8	39.6	38.6	37.3	36.1	34.7			52
56				36.6	35.5	34.6	33.3	32.2	30.7	29.8	27.7	56
60					32	31.1	29.9	28.8	27.4	26.5	24.8	60
64					28.8	28.1	26.9	25.8	24.4	23.6	22.2	64
68						25.4	24.3	23.2	21.9	21.1	19.7	68
72							21.9	20.9	19.6	18.8	17.5	72
76							19.7	18.8	17.6	16.8	15.5	76
80								16.9	15.7	15	13.7	80
84									14	13.3	12.1	84
88										11.8	10.6	88
92										10.4	9.2	92
96											7.9	96

Main boom length: 63m Rear counterweight: 210t Central counterweight: 60t Main boom angle: 75°												
Radius (m)	Jib length (m)											Radius (m)
	24	30	36	42	48	54	60	66	72	78	84	
32	79.9											32
34	73.9	73										34
36	68.6	67.8	66.3									36
38	64	63.2	61.8									38
40	59.8	59.1	57.8	56.6								40
44		52.1	50.9	49.8	48.3	47.3						44
48		46.2	45.2	44.2	42.8	41.8	40.4					48
52			40.4	39.5	38.2	37.2	35.8	34.6	32.2			52
56				35.5	34.2	33.3	31.9	30.8	28.9	27.5		56
60				31.9	30.8	29.9	28.6	27.5	26	24.7	22.6	60
64					27.8	27	25.7	24.6	23.2	22.2	20.1	64
68						24.4	23.2	22.1	20.7	19.9	17.9	68
72							20.9	19.9	18.5	17.7	15.9	72
76							18.8	17.9	16.5	15.7	14.1	76
80								16	14.8	14	12.5	80
84									13.1	12.4	11	84
88									11.6	10.9	9.7	88
92										9.6	8.3	92
96											7.1	96
100											5.9	100

Main boom length: 39m Rear counterweight: 210t Central counterweight: 60t Main boom angle: 65°												
Radius (m)	Jib length (m)											Radius (m)
	24	30	36	42	48	54	60	66	72	78	84	
36	69.4											36
38	64.7											38
40	60.5	59.8										40
44		52.8	51.5									44
48		46.8	45.8	44.7								48
52			41	40	38.7	37.7						52
56				35.9	34.7	33.8	32.4					56
60				32.3	31.3	30.4	29.1	27.9				60
64					28.2	27.4	26.1	25	23.6			64
68						24.8	23.6	22.5	21.1	20.2		68
72						22.4	21.3	20.2	18.9	18	16.7	72
76							19.2	18.2	16.9	16.1	14.7	76
80								16.3	15.1	14.3	13	80
84									13.4	12.7	11.4	84
88									11.9	11.2	9.9	88
92										9.8	8.6	92
96											7.4	96
100											6.2	100

Main boom length: 45m Rear counterweight: 210t Central counterweight: 60t Main boom angle: 65°												
Radius (m)	Jib length (m)											Radius (m)
	24	30	36	42	48	54	60	66	72	78	84	
38	61.9											38
40	57.9											40
44	51	50.3										44
48		44.7	43.5	42.3								48
52			38.9	37.8	36.4							52
56			34.9	34	32.6	31.6						56
60				30.6	29.4	28.4	27					60
64					26.5	25.6	24.2	23.1				64
68					23.9	23.1	21.8	20.6	19.2			68
72						20.8	19.6	18.5	17.1	16.2	14.8	72
76							17.6	16.6	15.2	14.4	13	76
80							15.8	14.8	13.5	12.7	11.3	80
84								13.2	11.9	11.2	9.8	84
88									10.5	9.8	8.4	88
92									9.1	8.5	7.2	92
96										7.3	6	96

Main boom length: 51m Rear counterweight: 210t Central counterweight: 60t Main boom angle: 65°												
Radius (m)	Jib length (m)											Radius (m)
	24	30	36	42	48	54	60	66	72	78	84	
40	55.2											40
44	48.6	47.7										44
48	43	42.5	41.1									48
52		38	36.7	35.5								52
56			33	31.9	30.5							56
60				28.7	27.4	26.3						60
64				25.9	24.7	23.7	22.3	21				64
68					22.2	21.3	19.9	18.8	17.2			68
72						19.2	17.9	16.7	15.2	14.3		72
76						17.3	16.1	14.9	13.5	12.6	11.2	76
80							14.4	13.3	11.9	11	9.6	80
84								11.8	10.4	9.6	8.2	84
88								10.4	9.1	8.3	6.9	88
92									7.8	7.1	5.7	92
96										6		96

Main boom length: 57m Rear counterweight: 210t Central counterweight: 60t Main boom angle: 65°												
Radius (m)	Jib length (m)											Radius (m)
	24	30	36	42	48	54	60	66	72	78	84	
44	45.8											44
48	40.6	39.8										48
52		35.6	34.2									52
56		31.9	30.7	29.5	28							56
60			27.6	26.5	25.1	24						60
64				23.9	22.5	21.5	20					64
68				21.5	20.3	19.3	17.8	16.6				68
72					18.2	17.3	15.9	14.7	13.1			72
76						15.5	14.2	13	11.5	10.6		76
80							12.6	11.5	10	9.1	7.6	80
84							11.2	10.1	8.7	7.8	6.3	84
88								8.8	7.4	6.6	5.1	88
92									6.3	5.5		92
96									5.2			96

Main boom length: 63m Rear counterweight: 210t Central counterweight: 60t Main boom angle: 65°												
Radius (m)	Jib length (m)											Radius (m)
	24	30	36	42	48	54	60	66	72	78	84	
48	38.3											48
52	34.2	33.4	31.8									52
56		30	28.6	27.3								56
60			25.7	24.5	23							60
64			23.1	22	20.6	19.5						64
68				19.9	18.5	17.4	15.9					68
72					16.6	15.6	14.1	12.9				72
76					14.8	13.9	12.5	11.3	9.7	8.5		76
80						12.4	11.1	9.9	8.3	7.2	5.2	80
84							9.7	8.6	7	6		84
88							8.4	7.4	5.9			88
92								6.2				92

3.11. Lifting performance of SLHSDB-3

Code	G67	G69	G68	G66A	G66	G65	G14AS	G13	G14B	G16
Length	12	12	12	12	12	12	12	6	12	3
108	1	2	1	1	1	1	0	1	0	0
111	1	2	1	1	1	1	0	1	0	1
114	1	2	1	1	1	1	1	0	0	0
117	1	2	1	1	1	1	1	0	0	1
120	1	2	1	1	1	1	1	1	0	0
123	1	2	1	1	1	1	1	1	0	1
126	1	2	1	1	1	1	1	0	1	0
129	1	2	1	1	1	1	1	0	1	1
132	1	2	1	1	1	1	1	1	1	0
135	1	2	1	1	1	1	1	1	1	1
138	1	2	1	1	1	1	1	0	2	0

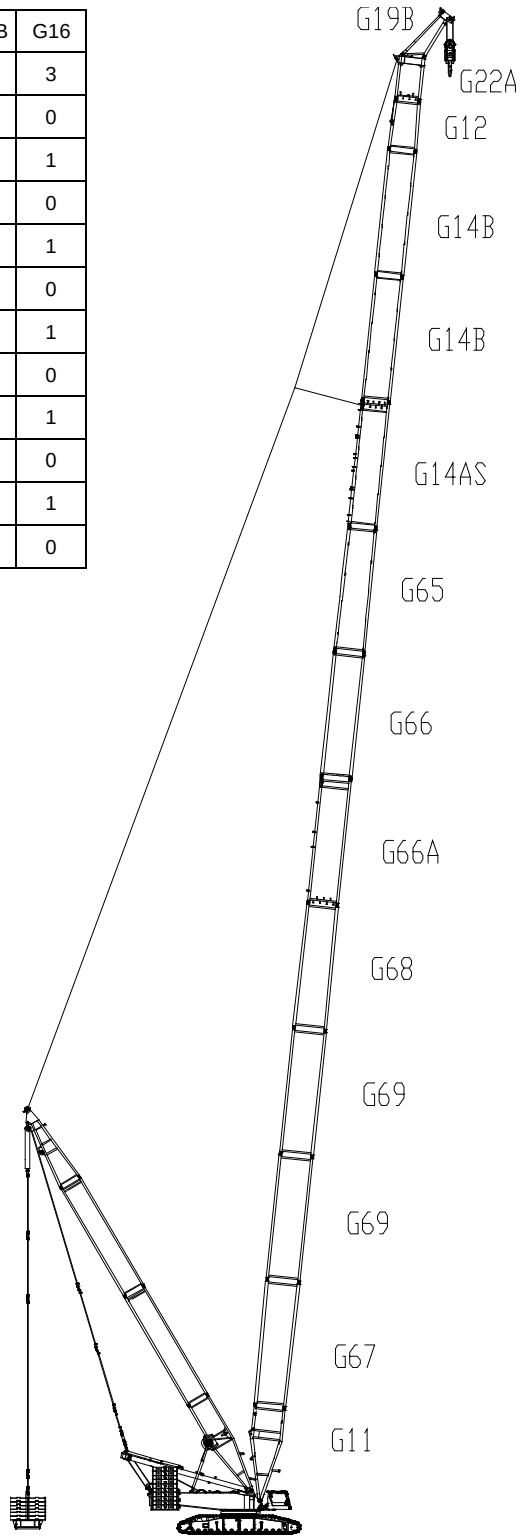

Note: Main boom pivot section (G11-9m), main boom head (G12-4.8m) and luffing jib head (G22-4.2m) are not labeled in the above table.

Figure 30 Combination of boom section of SLHSDB-3（108m-138m+5.5m）

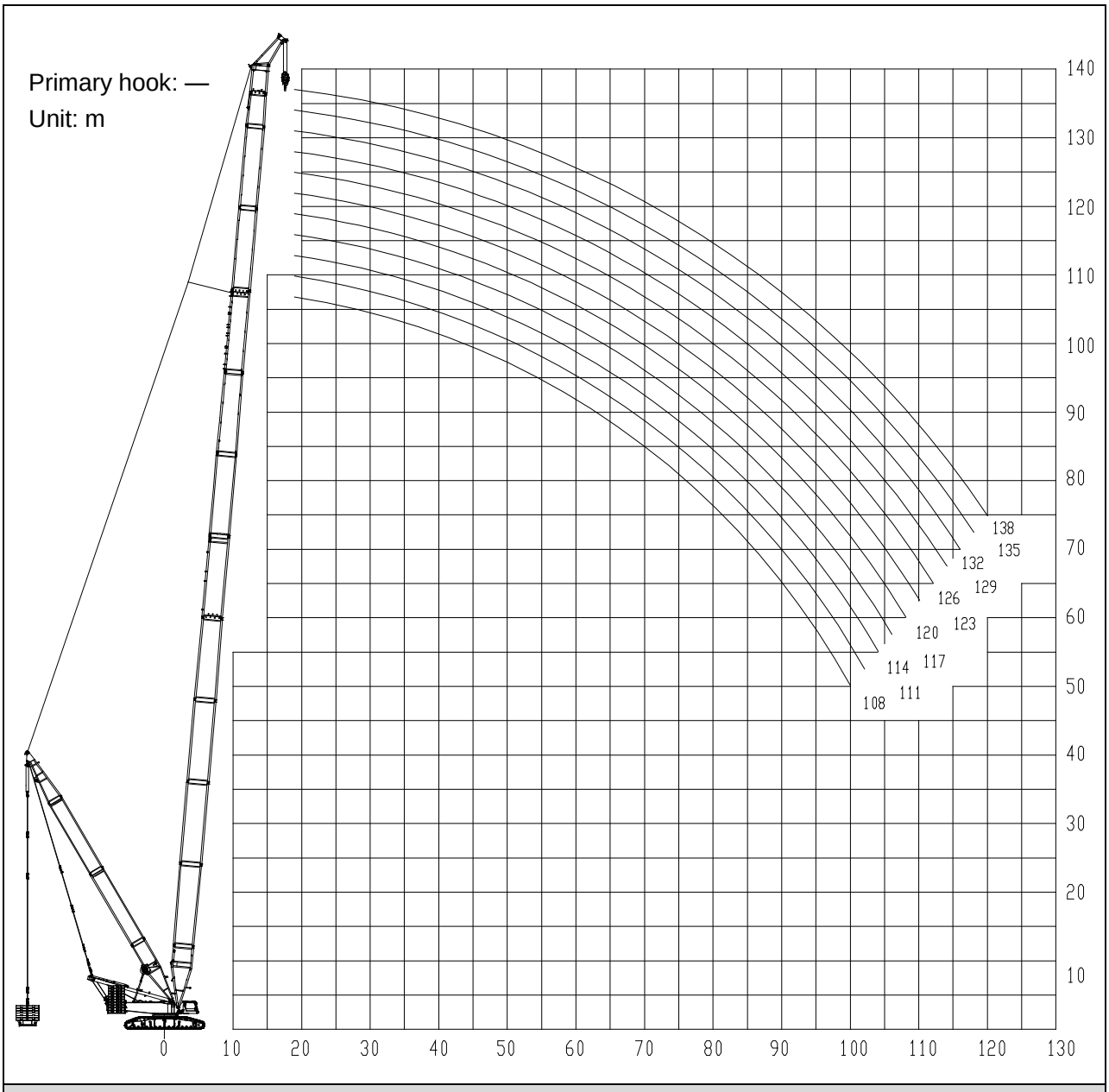

Figure 31 Hoisting height characteristic curve of SLHSDB-3（108m-138m+5.5m）

Lifting capacity charts of SLHSDB-3

Superlift radius: 17m Rear counterweight: 210t Central counterweight: 60t Suspended ballast: 300t

Radius (m)	Main boom length (m)											Radius (m)
	108	111	114	117	120	123	126	129	132	135	138	
19	270	262	262	261	231	230	217	205	191	181	169	19
20	270	262	262	261	231	230	217	205	191	181	169	20
22	270	262	262	261	231	230	217	205	191	181	169	22
24	270	262	262	261	231	230	217	205	191	181	169	24
26	270	262	262	261	231	230	217	205	191	181	169	26
28	270	262	262	261	231	230	217	205	191	181	169	28
30	270	262	262	261	231	230	217	205	191	181	169	30
32	270	262	262	261	231	230	217	205	191	181	169	32
34	253	252	252	252	231	230	217	205	191	181	169	34
36	234	234	234	233	231	230	217	205	191	181	169	36
38	218	217	217	216	216	215	216	205	191	180	168	38
40	203	203	203	202	201	201	201	200	191	180	168	40
44	178	178	178	177	176	176	176	175	175	174	167	44
48	158	157	157	156	156	155	156	155	154	153	154	48
52	141	140	140	139	139	138	139	138	137	136	137	52
56	127	126	126	125	125	124	124	123	123	122	123	56
60	115	114	114	113	112	112	112	111	111	110	110	60
64	104	103	103	102	102	101	101	100	100	99.3	99.8	64
68	94.9	94	94	93.1	92.7	91.8	92.3	91.4	91	90	90.4	68
72	86.7	85.8	85.8	84.9	84.4	83.5	84.1	83.2	82.7	81.7	82.2	72
76	79.3	78.5	78.4	77.5	77.1	76.2	76.7	75.8	75.4	74.4	74.8	76
80	72.8	71.9	71.8	71	70.5	69.6	70.1	69.2	68.8	67.8	68.3	80
84	66.9	66	65.9	65	64.6	63.7	64.2	63.3	62.8	61.8	62.3	84
88	61.5	60.6	60.6	59.7	59.2	58.3	58.9	57.9	57.5	56.5	57	88
92	56.6	55.7	55.7	54.8	54.3	53.4	54	53	52.6	51.6	52.1	92
96	52.1	51.2	51.2	50.3	49.8	48.9	49.5	48.6	48.1	47.1	47.6	96
100	47.9	47	47	46.1	45.7	44.8	45.4	44.4	44	43	43.5	100
104			43.2	42.3	41.9	41	41.6	40.6	40.2	39.2	39.7	104
108				38.8	38.4	37.4	38	37.1	36.7	35.7	36.2	108
112						34.2	34.8	33.8	33.4	32.4	32.9	112
116							31.7	30.8	30.4	29.3	29.9	116
120									27.5	26.5	27	120

Superlift radius: 20m Rear counterweight: 210t Central counterweight: 60t Suspended ballast: 0t												
Radius (m)	Main boom length (m)											Radius (m)
	108	111	114	117	120	123	126	129	132	135	138	
19	169	167	166	164	162	160	159	157	155	153	152	19
20	159	158	156	155	153	151	150	148	147	145	144	20
22	140	139	138	137	135	134	134	132	131	130	129	22
24	124	123	122	121	120	119	118	117	116	115	115	24
26	111	110	109	108	107	106	106	104	103	102	102	26
28	99.6	98.5	98	96.8	96	94.8	94.8	93.6	92.8	91.5	91.4	28
30	89.8	88.7	88.2	87.1	86.3	85.2	85.2	84.1	83.3	82.1	82	30
32	80.3	79.6	79.6	78.7	77.9	76.8	76.9	75.8	75	73.9	73.9	32
34	72.1	71.3	71.3	70.6	70.2	69.4	69.5	68.5	67.7	66.6	66.6	34
36	64.9	64.1	64.1	63.3	62.9	62.1	62.7	61.9	61.3	60.1	60.2	36
38	58.5	57.7	57.7	56.9	56.5	55.7	56.2	55.4	55.1	54.2	54.4	38
40	52.8	52.1	52	51.2	50.8	50	50.5	49.7	49.3	48.4	48.9	40
44	43.2	42.4	42.4	41.6	41.1	40.3	40.8	40	39.6	38.7	39.1	44
48	35.4	34.5	34.5	33.6	33.2	32.4	32.9	32.1	31.6	30.7	31.2	48
52	28.8	27.9	27.9	27.1	26.6	25.8	26.3	25.4	25	24	24.5	52
56	23.2	22.4	22.3	21.5	21	20.1	20.7	19.8	19.4	18.4	18.9	56
60	18.4	17.6	17.5	16.7	16.2	15.3	15.9	15	14.5	13.6	14	60
64	14.3	13.4	13.4	12.5	12	11.1	11.7	10.8	10.3	9.3	9.8	64
68	10.6	9.7	9.7	8.8	8.4	7.5	8	7.1	6.7	5.7	6.1	68
72	7.4	6.5	6.4	5.6	5.1	160						72

4. Technical instruction

4.1. Mechanisms

Hoisting mechanism

The hoisting mechanism, consisting of an imported variable displacement axial piston hydraulic motor, a balance valve, a reducer, a normally-closed brake and wire rope, can be controlled independently.

A synchronous controller can be used when both winches are acting on the load hook to keep horizontal hoisting and lowering of the load hook.

The hoisting mechanism has two different hoisting speeds, which largely improves the working efficiency. A synchronous controller can be used in the process of synchronous operation.

	Diameter of rope	Rope length	Single rope tension	Speed of the outermost layer
Primary hoisting I, II	28mm	1100m	16t	130m/min
Hoisting on tip boom	28mm	320m	16t	130m/min

Derricking mechanism

The derricking mechanism consists of an imported constant displacement axial piston hydraulic motor, a balance valve, a reducer, a normally-closed brake, and wire rope.

With the normally-close brake, the derricking mechanism can be controlled independently. It has the function of automatic locking, through which the drum of winch can be automatically locked when the hydraulic joystick is in the neutral position.

The mechanism is able to make hoisting and lowering movements through stepless speed regulation. It is also able to make movements at a dead slow speed.

There are two kinds of superlift working radiuses that are adjustable. It is able to lift the suspended ballast off the ground and make free slewing and barrier-free traveling when the crane is loaded.

	Diameter of rope	Rope length	Single rope tension	Speed of the outermost layer
Primary derricking mechanism	28mm	650m	16t	2×56m/min
Superlift derricking	28mm	1480m	16t	130m/min

mechanism				

Slewing mechanism

It is a double-drive and double-slewing mechanism, consisting of a constant displacement axial built-in piston hydraulic motor, a gear reducer, a brake, a small gear and a slewing bearing.

The slewing mechanism has the function of controlling slewing so that impacts can be reduced and starting and braking can be more stable.

A three-row roller-type external gearing slewing bearing and a slewing reducer are used by the mechanism to guarantee its strong load bearing capacity, high precision, and stable and precise slewing movement.

The slewing mechanism is able to make movements through the stepless speed regulation from 0 to 0.7r/min.

Traveling mechanism

The traveling mechanism is equipped with double motors and double reducers. The hydraulic motor, the traveling reducer and the balance valve are imported from Germany. It is able to make such movements as traveling in straight line, steering with one crawler, differentiate steering, pivot steering and traveling with load through the manipulation of control levers. With its high maneuverability and flexibility, the displacement of traveling for 20m is smaller than or equal to 25cm. There is a dead slow speed gear set for traveling and stepless speed regulation can be realized for each speed gear. It is also able to travel in a high speed.

Crawler tension can be adjusted conveniently and reliably.

Traveling speed: 0.6/1km/h

Gradeability: 30%

Crawler tensioning: Tensioning cylinder is controlled by an independent pump station, which is convenient and reliable.

A-frame erecting mechanism

The A-frame erecting mechanism is composed of three parts, A-frame, A-frame erecting cylinder, and auxiliary hydraulic system. This mechanism is used for self-assembly and dismantling (or during transferring). Erect A-frame from the horizontal position to over 110° for the convenience of connecting anchoring rods, assembling boom sections, crawlers and counterweight plates.

Slewing and pitching mechanism of operator's cab

The operator's cab can be swiveled from one side of the slewing table to the front of the slewing table. Fix the cab with alignment pins to reduce the width of the whole machine for the convenience of transport.

Movements of pitching up and down are controlled by the pitching cylinder. The operator's cab can be pitched up for 20° to broaden the view of the operator when the load is hoisted high.

Outrigger erecting and crawler self-assembling and dismantling mechanism

The mechanism consists of such parts as undercarriage outrigger, outrigger cylinder, outrigger valve, crawler power pin, etc. The cylinder erecting mechanism is the main bearing part for crawler self-assembling and dismantling. The crawler self-assembling and dismantling mechanism lifts track carrier assy. through A-frame and A-frame erecting mechanism and connects the chassis with the track carrier assy. through power pins. The track carrier assy. can be assembled or disassembled automatically through this mechanism without the help of other auxiliary lifting equipment.

4.2. Systems

Hydraulic system

Hydraulic system is composed of such parts as main pump, control valve, hydraulic motor, hydraulic oil tank, cooler, etc.

A world's advanced pump-control system is used, major components of which, such as pump, motor and the main return valve, are imported from Germany. The hydraulic system is efficient and energy-saving with a high reliability and a long service life.

Main hydraulic pump: variable displacement piston pump, driven by the engine.

Oil supply of auxiliary mechanisms: constant pressure pump, serial gear pump.

Main control valve: pilot electro-hydraulic control valve.

Control of the main return: pump-control system and control lever.

Control of auxiliary mechanisms: solenoid directional valve groups (fitted with discharging overflow valve).

Volume of hydraulic oil tank: 940L.

Oil filter: filter of oil return, ultra-filter for control oil circuit.

Cooler: aluminium radiator with a hydraulic drive fan.

Electrical system

Storage battery of 24V, negative ground; DC low-voltage electrical devices accord with regulations of GB1497, and the equipment precision is not inferior to tier 1.5.

Electrical devices of the whole machine mainly includes power supply, starting and shutoff device of the engine, indicator light, alarm, illuminating device, fan, windscreen wiper, horn, hoisting high limiter, hydraulic oil cooling fan, digital display, PLC controller, load moment limiter, preheating device of the engine, safety devices, etc. These devices guarantee the safe operation and the good working environment for the crane. Engine, PLC controller, load moment limiter, and digital display are effectively connected together through the CAN bussing technology. It has the function of fault detecting and self-diagnosis.

The engine is an electronic fuel injection diesel engine with CAN bus interface, which is imported with original packaging.

Emission standard: U.S. EPA Tier 3 and EU Stage III

The large volume of the fuel oil tank, which is 700L, provides long enough working hours of the engine.

Centralized display system

The large touch LCD of 10.4 inches displays in multiple languages. It displays all kinds of signals collected by the PLC controller, including engine speed, water temperature, fuel oil pressure, hydraulic pump pressure, pressure of the major motor, situation of the crane’s horizontal operation, etc. It also displays real-time monitoring on the working condition. The system will send out a yellow or a red alarm and an audible alarm simultaneously when the working condition of the crane is abnormal.

GPS/GPRS remote monitoring system

The GPS/GPRS remote monitoring system consists of such parts as vehicle-mounted computer system, vehicle-mounted communication/navigation system, GPS system, GPRS wireless data transmission system, network server system, and remote monitoring center system. It has such functions as global positioning for equipment, monitoring on working information, fault diagnosis, remote maintenance and alarm, locking, and burglary prevention, etc.

Centralized lubrication system

The centralized lubrication system is convenient for maintenance and reduces abrasion between components.

5. Working conditions and matters need attention

5.1. Working environment

① Environment temperature ranges between -20℃ and 40℃. The altitude of the working site shall not exceed 1000m.

② Wind speed: It shall not exceed 14.1m/s when boom length ≤50m or it shall not exceed 9.8m/s when boom length＞50m.

③ The ground must be solid and flat with a gradient of less than 1%. The bearing capacity of the ground or the bearing surface should be larger than the maximum ground pressure of the current operating mode.

5.2. Load

① Weight of slings and rope are contained in lifting capacity charts. The actual weight of load should be smaller than the value in chart.

② Data in lifting capacity charts are provided based on the working condition that the ground is solid and flat and load is freely suspended.

③ Blank spaces with no capacities represent non-operation areas. Operation is prohibited in these areas.

④ Load capacity meets the requirement of working environment. It is permitted to travel with 100% load when the traveling speed ≤ 0.1m/s (6m/min).

6. Safe monitoring system

Safe monitoring system consists of two major parts, safe controlling system and video monitoring system. Safe controlling system realizes signal collecting, signal processing, signal display, signal output and storage of system parameters. Video monitoring system realizes monitoring on winches, traveling area and lifting point as well as video storage.

6.1. Hardware devices of safety monitoring system

6.1.1 Composition of the safe controlling system

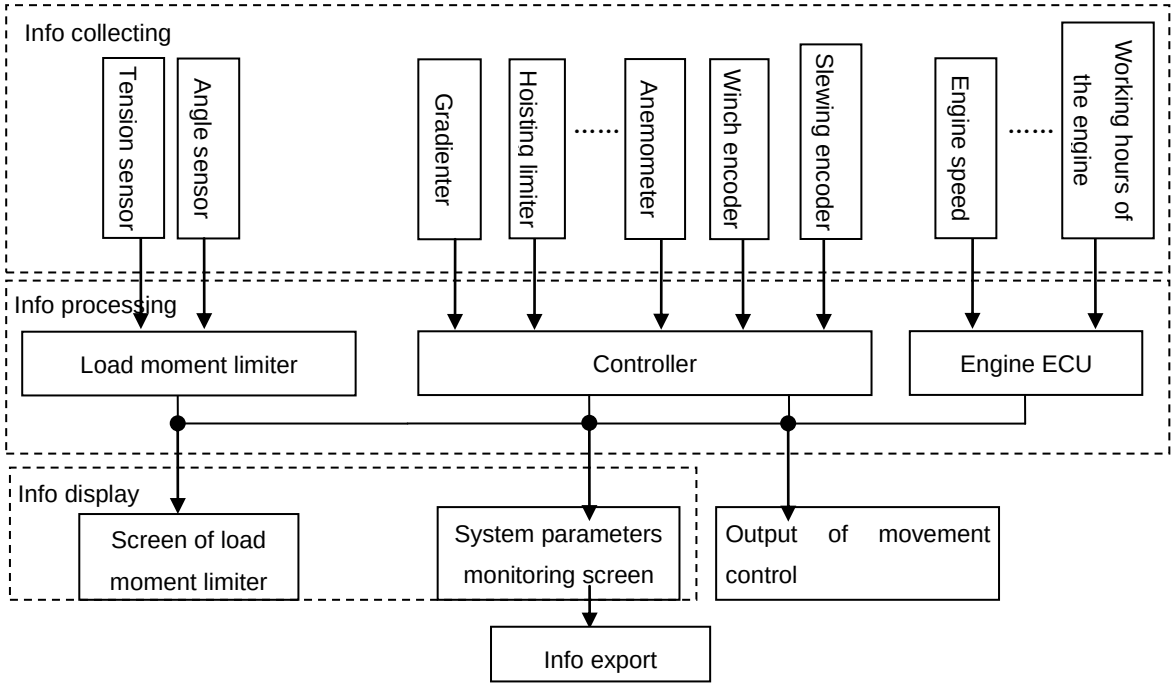

Figure 32 Composition of the safe controlling system

Information gathering is completed by different kinds of sensors, such as tension sensor, angle sensor, gradienter, hoisting limiter, anemometer, winch encoder (lowering limiter), slewing encoder, engine speed sensor, etc. Sensor signal interfaces include passive switching value signal interface, analog signal interface, pulse signal interface, and bus data signal interface. The core components of information processing are load moment limiter, controller, and engine ECU. The major components of the information display unit are screen of load moment limiter and system parameters monitoring screen. The controller controls movement output. The protocol of data communication among load moment limiter, screen of load moment limiter, controller, and system parameter monitoring screen is CAN Open protocol. The protocol of data communication between controller and engine ECU is the standard J1939 protocol.

6.1.2 Video monitoring system

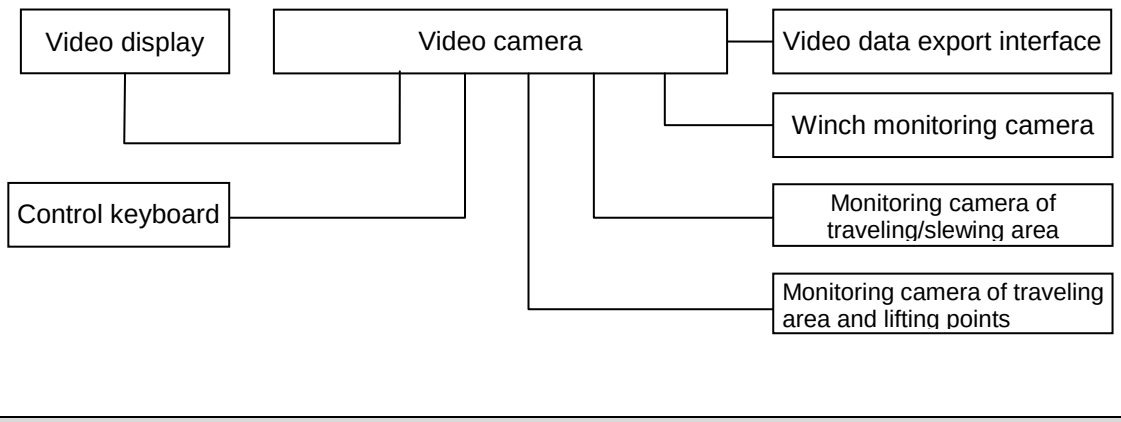

Figure 33 Composition of video monitoring system

There are four cameras for main boom operating mode (standard), separately distributed in the front, the central and the rear part of the slewing table and on the winch of the main boom pivot section. Each camera is fitted with an illuminating light for the convenience of operation at night. There is also a ballhead camera on the boom head, which monitors the load condition at all times.

The operator's cab is equipped with two displays. Each display has four split screens, on which information monitored by cameras can be switched, so that operators can know the condition of winches, the rear end of the slewing table and the load in time.

6.2. Management authority

6.2.1 Limit of authority for system parameters

Management authority for movement controlling parameters is limited, which can only be set when the password is entered correctly. The specific step goes like this: press down the "Parameter" button (F3) when the homepage is shown on the parameter monitoring display to enter the parameter setting interface. Movement controlling parameters can be only set when the correct password is entered.

6.2.2 Limit of authority for monitoring data exporting

Management authority for monitoring data exporting is limited. Data can be only exported when the correct password is entered.

6.2.3 Limit of authority for video data exporting

Management authority for video data exporting is limited. Data can be only exported when the correct password is entered.

6.3. Self-diagnosis of faults

The system has the function of fault self-diagnosis. An alarming signal will be sent out immediately when a system fault occurs. For example, fault of load moment limiter, fault of bus, fault of limit switches.

6.4. Alarm devices

Safety alarms include engine oil pressure alarm, water temperature alarm, air filter blocking alarm, oil inlet and return blocking alarm, wind speed alarm, over-hoisting alarm of the primary winch, over-lowering alarm of the primary winch, over-hoisting alarm of the secondary winch, over-lowering alarm of the secondary winch, main boom limit angle alarm, overload alarm, luffing jib limit angle alarm, superlift limit angle alarm, etc.